EANCOM® 2002 S3

PAYMUL

Multiple payment order message

Edition 2016

1. Introduction 2
2. Message Structure Chart 4
3. Branching Diagram 6
4. Segments Description 15
5. Segments Layout 22
6. Example(s) 106

1. Introduction

Status

MESSAGE TYPE	: PAYMUL
REFERENCE DIRECTORY	: D.01B
EANCOM® SUBSET VERSION	: 003

Definition

A Multiple Payment order is sent by the Ordering Customer (or Payor or Agent on behalf of the Ordering Customer) to the Ordered Bank, to instruct the Ordered Bank to debit one or more accounts it services for the Ordering Customer, and to arrange for the payment of specified amounts to several Beneficiaries (or Payees) in settlement of the referenced business transaction(s).

Throughout this document, the term 'Ordering Customer' refers to either an Ordering Customer, or a Payor or Agent acting (sending) on behalf of the Ordering Customer; likewise the term 'Beneficiary' refers to either a Beneficiary, or a Payee or Agent acting on behalf of the Beneficiary.

Principles

- A Multiple Payment Order may cover the financial settlement of one or more commercial trade transactions such as invoices, credit notes, debit notes etc. It is not intended for use in securities trading.
- Charges may be borne on account(s) different of the account(s) held by the Ordering Customer.
- Several debit accounts, execution dates and currencies may be specified.
- The Ordered Bank may need a confirmation/authorisation to be allowed to process the Multiple Payment Order message.
- The only way to modify a Multiple Payment Order message is to cancel the whole message or part thereof (e.g. by the use of the FINCAN message). In that respect, one to many order(s) could be cancelled within the message, avoiding to be obliged to cancel the whole message.

Notes

This section should be read in conjunction with the branching diagram and the segment table which indicate mandatory, conditional and repeating requirements.

The following semantic principles which apply to the message are intended to facilitate a better understanding of the message:

The Multiple Payment Order message is structured in three levels, A, B, and C.

- Level A contains data related to routing criteria for the whole message and is contained in the heading section, segment group 1 through 3, the CNT segment, group 24, and the UNT segment.
- Level B contains data from the debit side (one debit account, one currency, one execution date) and data which applies to all further details of C level(s) and is contained in segment group 4 through 10.
- Level C contains data related to the credit side, and this data is considered as unique for each payment transaction and is contained in segment group 11 through 23.

The structure of the message is designed to allow several B levels, each B level being followed by its related C levels.

Using the message for simple, extended, or multiple transactions

The multiple payment order message may be used by an ordering customer to transmit single, extended, or multiple payment orders to it's bank.

A **payment order** is an instruction from an ordering customer to its bank ordering that funds be debited from its account and credited to the account of the identified beneficiary.

A simple payment order always relates to **one payment** from **one ordering customer** to **one beneficiary**. To use the PAYMUL message as a simple payment order the following data must be provided;

Data	Where

1. Introduction

Ordering Customer Data / Beneficiary data	FII - Group 6 / NAD - Group 7 FII - Group 12 / NAD - Group 13
Credit / Debit Values	MOA - Group 5 (DEBIT value) MOA - Group 11 (CREDIT value)
Payment Order Number	RFF - Group 4 (DEBIT side)' RFF - Group 11 (CREDIT side)
Payment Data	Group 16 (PRC segment) Group 17 (DOC segment) Group 23 (GIS segment) Remittance data provided in the EANCOM® REMADV message.

An extended payment order always relates to **many payments** from **one ordering customer** to **one beneficiary**. To use the PAYMUL message as an extended payment order the following data must be provided;

Data	**Where**
Ordering Customer Data / Beneficiary data	FII - Group 6 / NAD - Group 7 FII - Group 12 / NAD - Group 13
Credit / Debit Values	MOA - Group 5 (DEBIT value) MOA - Group 11 (CREDIT value)
Payment Order Number	RFF - Group 4 (DEBIT side) RFF - Group 11 (CREDIT side)
Payment Data	Group 16 (PRC segment) Group 17 (as many segments as required) to identify each payment being made. Group 23 (GIS segment)

A multiple payment order always relates to **many payments** from **one ordering customer** to **many beneficiaries**. The complete structure of the PAYMUL message may be transmitted in order to provide multiple payment orders.

Remittance data

Included in the multiple payment order message is the functionality to provide detailed remittance data. This data is simply transmitted by the ordering customer's bank to the beneficiary’s bank (is not changed by either bank) for ultimate transmission to the beneficiary in the credit advice.

In addition to this facility EANCOM® also includes the trade Remittance Advice message (REMADV). The method to be used to communicate remittance advice data depends on user requirements.

If the user wishes to transmit the remittance information using the EANCOM® REMADV message a link is established between the payment order and the REMADV using the DOC segment in segment group 17.

2. Message Structure Chart

Multiple Payment Order Heading Section

UNH	1	M	1	- Message header
BGM	2	M	1	- Beginning of message
DTM	3	M	1	- Date/time/period
BUS	4	C	1	- Business function
SG2		C	5	- FII
FII	5	M	1	- Financial institution information
SG3		C	3	- NAD
NAD	6	M	1	- Name and address

Multiple Payment Order Detail Section - Level B

SG4			M	9999	- LIN-DTM-RFF-BUS-FCA-SG5-SG6-SG7-SG8-SG9-SG10-SG11
LIN		7	M	1	- Line item
DTM		8	C	1	- Date/time/period
RFF		9	C	2	- Reference
BUS		10	C	1	- Business function
FCA		11	C	1	- Financial charges allocation
SG5			C	1	- MOA-CUX-DTM-RFF
MOA		12	M	1	- Monetary amount
CUX		13	C	1	- Currencies
DTM		14	C	2	- Date/time/period
RFF		15	C	1	- Reference
SG6			M	2	- FII
FII		16	M	1	- Financial institution information
SG7			C	3	- NAD-CTA-COM
NAD		17	M	1	- Name and address
CTA		18	C	1	- Contact information
COM		19	C	5	- Communication contact
SG8			C	1	- INP-FTX-DTM
INP		20	M	1	- Parties and instruction
FTX		21	C	1	- Free text
DTM		22	C	2	- Date/time/period
SG9			C	10	- GIS-MOA-LOC-NAD-RCS-FTX
GIS	X	23	M	1	- General indicator
MOA		24	C	1	- Monetary amount
LOC		25	C	2	- Place/location identification
NAD		26	C	1	- Name and address
RCS		27	C	1	- Requirements and conditions
FTX		28	C	10	- Free text
SG10			C	1	- PRC-FTX
PRC		29	M	1	- Process identification
FTX		30	M	1	- Free text

Multiple Payment Order Detail Section - Level C

SG11		M	99999	- SEQ-MOA-DTM-RFF-PAI-FCA-SG12-SG13-SG14-SG15-SG16
SEQ	31	M	1	- Sequence details
MOA	32	M	1	- Monetary amount
DTM	33	C	1	- Date/time/period
RFF	34	C	3	- Reference
PAI	35	C	1	- Payment instructions
FCA	36	C	1	- Financial charges allocation
SG12		C	3	- FII
FII	37	M	1	- Financial institution information
SG13		C	3	- NAD-CTA-COM
NAD	38	M	1	- Name and address
CTA	39	C	1	- Contact information
COM	40	C	5	- Communication contact
SG14		C	3	- INP-FTX-DTM
INP	41	M	1	- Parties and instruction

2. Message Structure Chart

FTX		42	C	1	- Free text
DTM		43	C	2	- Date/time/period
SG15			C	10	- GIS-MOA-LOC-NAD-RCS-FTX
GIS	X	44	M	1	- General indicator
MOA		45	C	1	- Monetary amount
LOC		46	C	2	- Place/location identification
NAD		47	C	1	- Name and address
RCS		48	C	1	- Requirements and conditions
FTX		49	C	10	- Free text
SG16			C	1	- PRC-FTX-SG17-SG23
PRC		50	M	1	- Process identification
FTX		51	C	5	- Free text
SG17			C	9999	- DOC-MOA-DTM-RFF-NAD-SG18-SG19-SG20
DOC		52	M	1	- Document/message details
MOA		53	C	5	- Monetary amount
DTM		54	C	5	- Date/time/period
RFF		55	C	5	- Reference
NAD		56	C	2	- Name and address
SG18			C	5	- CUX-DTM
CUX		57	M	1	- Currencies
DTM		58	C	1	- Date/time/period
SG19			C	100	- AJT-MOA-RFF
AJT		59	M	1	- Adjustment details
MOA		60	M	1	- Monetary amount
RFF		61	C	1	- Reference
SG20			C	1000	- DLI-MOA-PIA-SG22
DLI		62	M	1	- Document line identification
MOA		63	M	5	- Monetary amount
PIA		64	C	5	- Additional product id
SG22			C	10	- AJT-MOA-RFF
AJT		65	M	1	- Adjustment details
MOA		66	M	1	- Monetary amount
RFF		67	C	1	- Reference
SG23			C	1	- GIS-MOA
GIS	X	68	M	1	- General indicator
MOA		69	C	5	- Monetary amount

Multiple Payment Order Summary Section

CNT		70	C	5	- Control total
SG24			C	5	- AUT-DTM
AUT		71	M	1	- Authentication result
DTM		72	C	1	- Date/time/period
UNT		73	M	1	- Message trailer

3. Branching Diagram

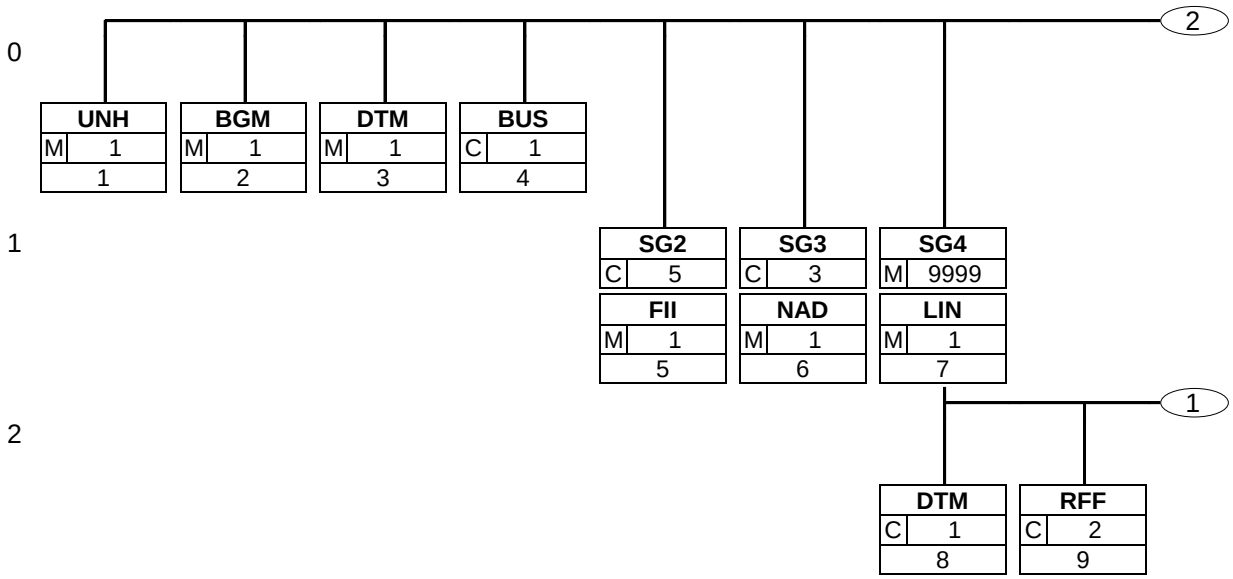

3. Branching Diagram

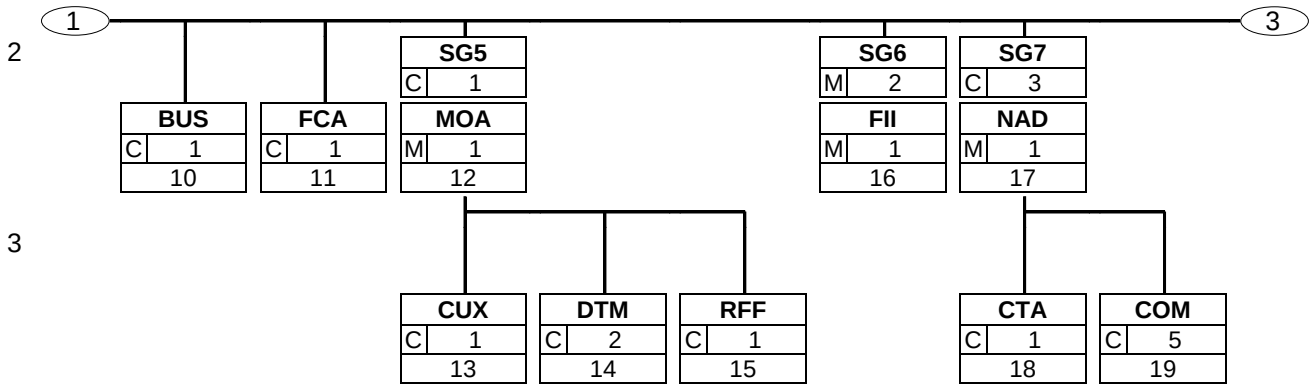

3. Branching Diagram

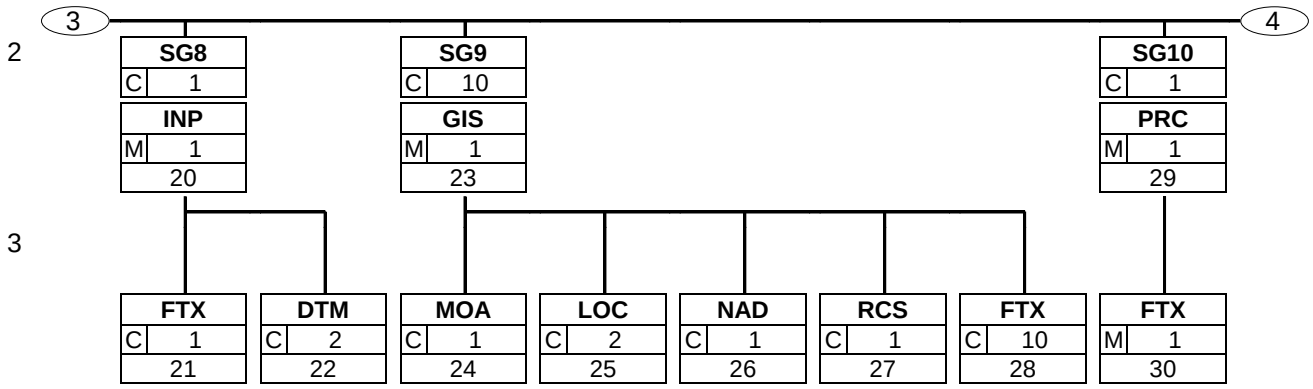

3. Branching Diagram

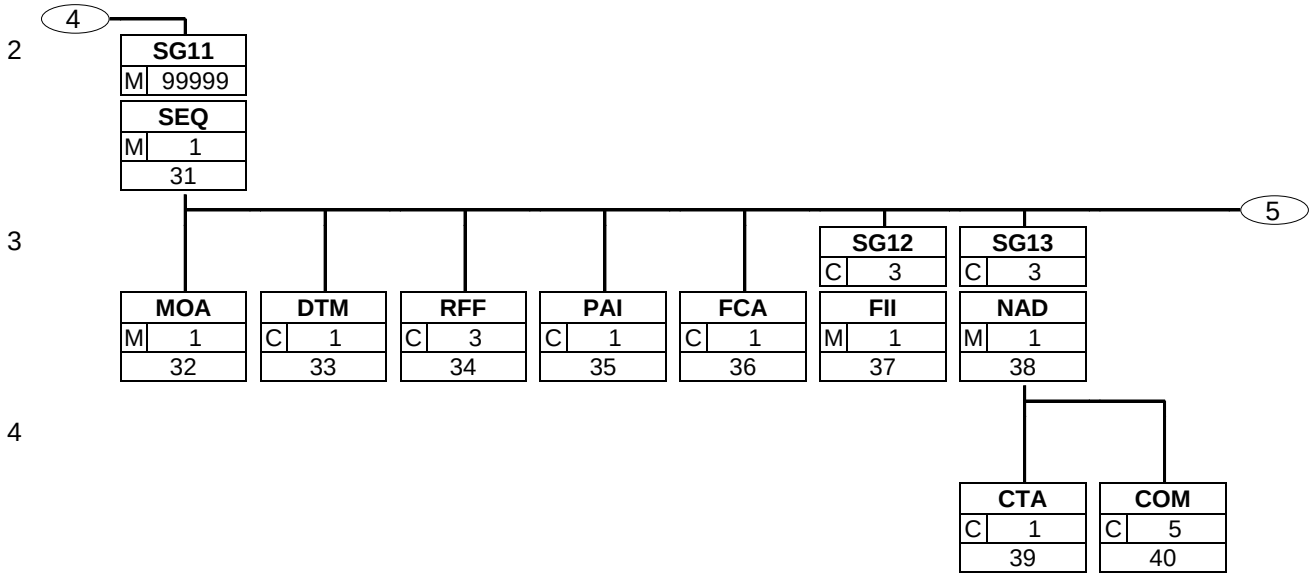

3. Branching Diagram

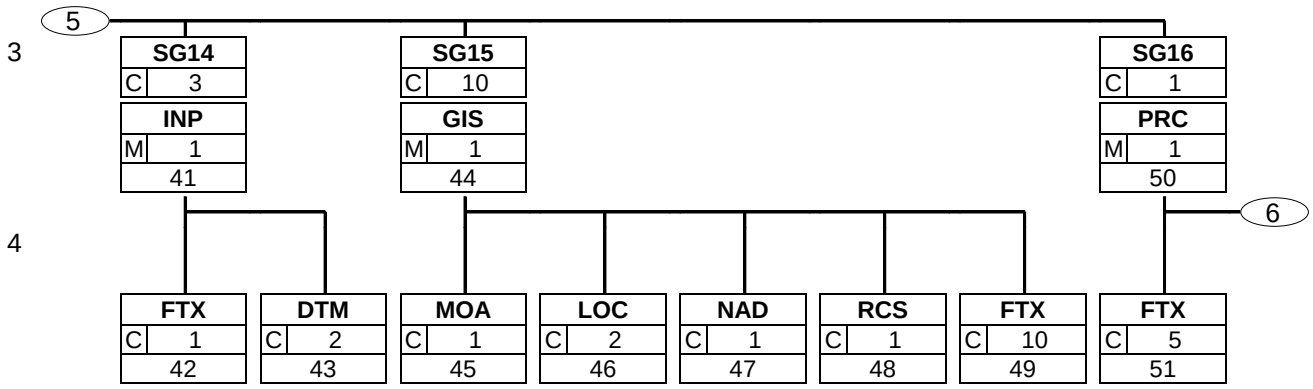

3. Branching Diagram

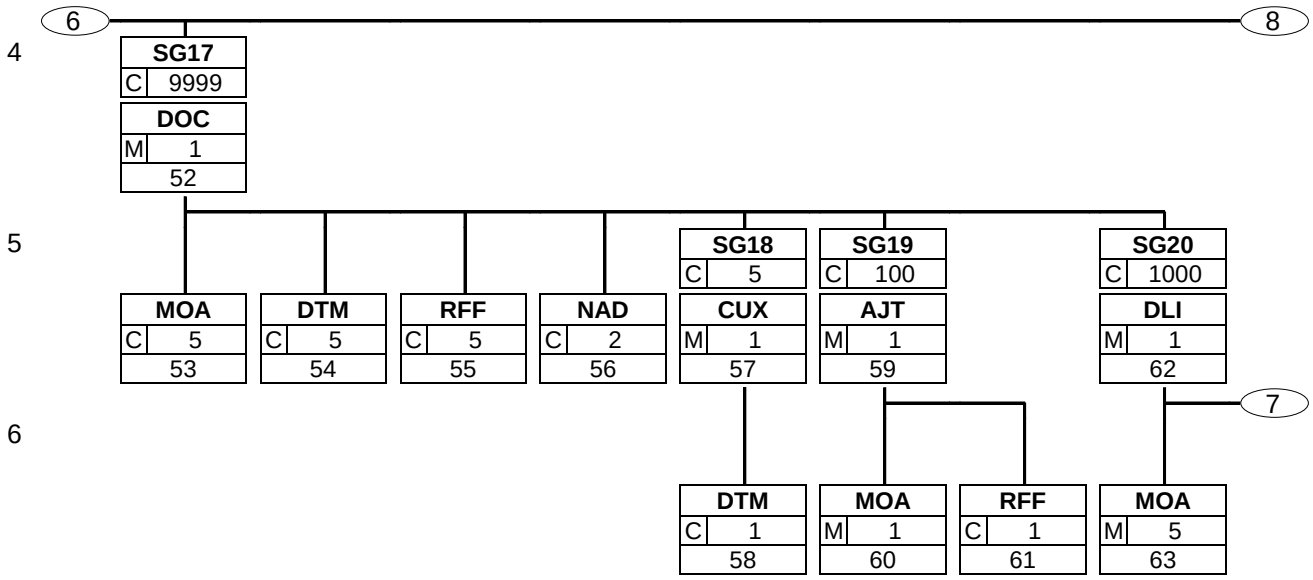

3. Branching Diagram

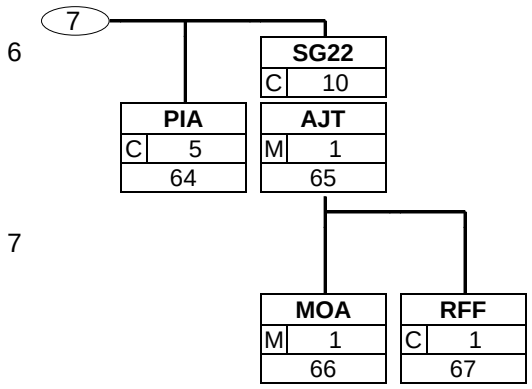

3. Branching Diagram

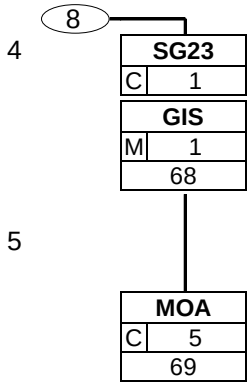

3. Branching Diagram

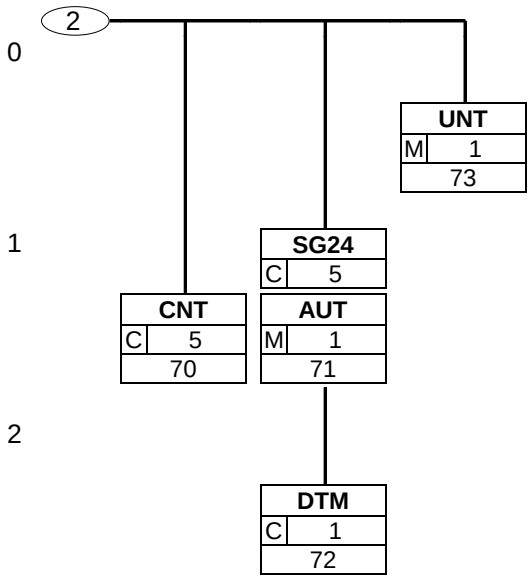

4. Segments Description

Multiple Payment Order Heading Section

UNH - M 1 - Message header

This segment is used to head, identify and specify a message.

BGM - M 1 - Beginning of message

All references other than the document number DE 1004 should be put in the RFF segment.

DTM - M 1 - Date/time/period

This segment is used to specify the date on which the Multiple Payment Order message was created.

BUS - C 1 - Business function

This segment is used to indicate whether all of the payments contained in the message are Domestic, European, or International.

SG2 - C 5 - **FII**

A group of segments identifying the financial institutions involved in the multiple payment order.

FII - M 1 - Financial institution information

This segment is used to identify the receiving financial institution of the multiple payment order message.

SG3 - C 3 - **NAD**

A group of segments identifying the ordering party, which is valid for all payment orders.

NAD - M 1 - Name and address

This segment is used to identify the sender of the multiple payment order message.

Multiple Payment Order Detail Section - Level B

SG4 - M 9999 - **LIN-DTM-RFF-BUS-FCA-SG5-SG6-SG7-SG8-SG9-SG10-SG11**

This segment group contains information regarding the debit side of this transaction and details which are pertinent to all payments specified in the message. Certain payment details may be provided either in segment group 4 or in segment group 11, but not in both.

LIN - M 1 - Line item

This segment is used to identify a line within the multiple payment order by means of a incrementing unique line number.

DTM - C 1 - Date/time/period

This segment is used to specify the requested execution date for the debit instruction contained in the multiple payment order.

RFF - C 2 - Reference

This segment is used to identify the reference number of the debit instruction. This number, along with the message number detailed in data element 1004 in the BGM segment, are passed back to the ordering customer in the debit advice (and multiple debit advice), banking status, and financial messages.

BUS - C 1 - Business function

This segment is used to identify the characteristics of the payment orders detailed in level C of the message. The contents of this segment will be transferred unchanged to the beneficiary of the multiple payment order.

FCA - C 1 - Financial charges allocation

This segment is used to identify the party on which any charges are allocated and the account (of the ordering customer) to which the charges should be directed.

4. Segments Description

SG5 - C 1 - **MOA-CUX-DTM-RFF**

A group of segments containing the currency of the single amounts in level C, currency to be transferred, plus the total of all single amounts of level C.

MOA - M 1 - Monetary amount

This segment is used to specify the payment amount for the debit instruction.

CUX - C 1 - Currencies

This segment is used to specify the currency of the monetary amount detailed in the previous MOA segment. The CUX segment is only used if code 57 (Equivalent amount) has been used in data element 5025 of the previous MOA segment. The currency information is required only by the ordering customer and its bank.

DTM - C 2 - Date/time/period

This segment is used to specify reference and rate of exchange dates.

RFF - C 1 - Reference

This segment is used to provide references to other transactions negotiated between the ordering customer and the ordered bank which will be used to finance the multiple payment order, e.g. a separate foreign exchange deal.

SG6 - M 2 - **FII**

A group of segments containing the account servicing bank including the account to be debited. If the ordering party is not quoted separately in the NAD-segment on level-B or level-A, then this group also contains the information of the ordering party.

FII - M 1 - Financial institution information

This segment is used to identify the financial institution and account information related to the ordering customer (payor) for the debit instruction.

SG7 - C 3 - **NAD-CTA-COM**

A group of segments identifying the ordering party mutually exclusive with NAD-segment on level-A for the ordering party (Ordering customer and payor). Furthermore, one contact party can also be quoted in this group.

NAD - M 1 - Name and address

This segment is used to identify the ordering customer for the debit instruction.

CTA - C 1 - Contact information

This segment is used to provide contact details relevant for the party identified in the previous NAD segment.

COM - C 5 - Communication contact

This segment is used to provide communications details relevant to the contact identified in the CTA segment.

SG8 - C 1 - **INP-FTX-DTM**

A group of segments containing instructions from the ordering customer relating to parties identified in the NAD and FII segments.

INP - M 1 - Parties and instruction

This segment is used to identify the party who must carry out an instruction from the ordering customer, and the party to whom the instruction is intended.

FTX - C 1 - Free text

This segment is used to provide additional coded or free text instructions to those provided in the INP segment.

DTM - C 2 - Date/time/period

This segment is used to specify the earliest and latest dates by which the instructions must be carried out.

SG9 - C 10 - **GIS-MOA-LOC-NAD-RCS-FTX**

A group of segments providing information for subsequent use by regulatory authorities requiring statistical and other types of data.

4. Segments Description

GIS - M 1 - General indicator

This segment is used to indicate that the information contained in the following segments will be passed on to and processed by the central and regulatory party identified in the NAD segment.

MOA - C 1 - Monetary amount

This segment is used to specify monetary amounts which must be reported to the regulatory party identified in the NAD segment.

LOC - C 2 - Place/location identification

This segment is used to indicate any locations relevant to the regulatory party identified in the NAD segment.

NAD - C 1 - Name and address

This segment is used to identify the central and regulatory authority specifying the regulatory information detailed in the GIS and FTX segments.

RCS - C 1 - Requirements and conditions

This segment is used to indicate any requirements and conditions related to the transaction which is being reported to the regulatory authorities.

FTX - C 10 - Free text

This segment is used to provide free or coded text information required by the regulatory authorities. The form and content of this segment is dependent upon the central bank or regulatory authority's requirements.

SG10 - C 1 - **PRC-FTX**

A group of segments - mutually exclusive with level -C- containing the details of payment, which are determined for all payments on level C.

PRC - M 1 - Process identification

This segment is used to provide processing information for each beneficiary of the debit instructions.

FTX - M 1 - Free text

This segment is used to provide free or coded text information related to the processing of the payment.

Multiple Payment Order Detail Section - Level C

SG11 - M 99999 - **SEQ-MOA-DTM-RFF-PAI-FCA-SG12-SG13-SG14-SG15-SG16**

This segment group contains information regarding the Beneficiaries of the payments. Certain payment details may be provided either in segment group 11 or in segment group 4, but not in both.

SEQ - M 1 - Sequence details

This segment is used to identify the start of the credit side of the transaction (level C) by means of a sequence number within the current line number. The sequence number should be reset to one for each occurrence of a new line number (in LIN segment).

MOA - M 1 - Monetary amount

This segment is used to specify the payment amount for the credit instruction.

DTM - C 1 - Date/time/period

This segment is used to specify dates relevant to the beneficiary's side of the credit instruction.

RFF - C 3 - Reference

This segment is used to identify any references related to the payment order.

4. Segments Description

PAI - C 1 - Payment instructions

This segment is used to specify the method of payment and the payment channel to be used. It is recommended that this segment is only used if no previous agreements are in place between trading partners, or the ordering customer/ account holder and its bank.

FCA - C 1 - Financial charges allocation

This segment is used to identify the basis on which any charges are allocated and the account (of the ordering customer) to which the charges should be directed.

SG12 - C 3 - **FII**

A group of segments containing the beneficiary's bank and the account and if necessary up to two intermediary banks.

FII - M 1 - Financial institution information

This segment is used to identify the financial institution and account number of the beneficiary.

SG13 - C 3 - **NAD-CTA-COM**

A group of segments identifying the name and address of the beneficiary and one contact party.

NAD - M 1 - Name and address

This segment is used to identify the beneficiary of the credit instruction and is passed on unchanged through the banking chain.

CTA - C 1 - Contact information

This segment is used to provide contact details relevant for the party identified in the previous NAD segment.

COM - C 5 - Communication contact

This segment is used to provide communications details relevant to the contact identified in the CTA segment.

SG14 - C 3 - **INP-FTX-DTM**

A group of segments containing instructions from the ordering customer relating to parties identified in the NAD and FII segments. It specifies action to be taken by the identified parties and the date (and optionally time) by which such action needs to be taken.

INP - M 1 - Parties and instruction

This segment is used to identify the party who must carry out an instruction from the ordering customer, and the party to whom the instruction is intended.

FTX - C 1 - Free text

This segment is used to provide additional coded or free text instructions to those provided in the INP segment.

DTM - C 2 - Date/time/period

This segment is used to specify the earliest and latest dates by which the instructions must be carried out.

SG15 - C 10 - **GIS-MOA-LOC-NAD-RCS-FTX**

A group of segments providing information for subsequent use by regulatory authorities requiring statistical and other types of data. It also identifies the regulatory authority for which the information is intended followed by the information itself.

GIS - M 1 - General indicator

This segment is used to indicate that the information contained in the following segments will be passed on to and processed by the central and regulatory party identified in the NAD segment.

4. Segments Description

MOA - C 1 - Monetary amount

This segment is used to specify monetary amounts which must be reported to the regulatory party identified in the NAD segment.

LOC - C 2 - Place/location identification

This segment is used to indicate any locations relevant to the regulatory party identified in the NAD segment.

NAD - C 1 - Name and address

This segment is used to identify the central and regulatory authority specifying the regulatory information detailed in the GIS and FTX segments.

RCS - C 1 - Requirements and conditions

This segment is used to indicate any requirements and conditions related to the transaction which is being reported to the regulatory authorities.

FTX - C 10 - Free text

This segment is used to provide free or coded text information required by the regulatory authorities. The form and content of this segment is dependent upon the central bank or regulatory authority's requirements.

SG16 - C 1 - **PRC-FTX-SG17-SG23**

A group of segments containing the details of payment.

PRC - M 1 - Process identification

This segment is used to provide processing information related to the credit instruction.

FTX - C 5 - Free text

This segment is used to provide free or coded text information related to the processing of the payment.

SG17 - C 9999 - **DOC-MOA-DTM-RFF-NAD-SG18-SG19-SG20**

A group of segments providing details of all documents, e.g., invoices, statements, despatch advices, etc..., to which the Multiple Payment Order refers. It includes information on the monetary amounts for each document and on any adjustments (with an indication of the reason for adjustments) and discounts.

DOC - M 1 - Document/message details

This segment is used to provide details of the documents, e.g. a group of invoices, to which the multiple payment order refers.

MOA - C 5 - Monetary amount

This segment is used to specify monetary amounts related to the complete document identified in the previous DOC segment.

DTM - C 5 - Date/time/period

This segment is used to specify dates related to the document identified in the DOC segment.

RFF - C 5 - Reference

This segment is used to provide any additional references relevant to the currently identified DOC segment.

NAD - C 2 - Name and address

This segment is used to identify any additional parties related to the currently identified document, e.g. delivery party.

SG18 - C 5 - **CUX-DTM**

A group of segments specifying the currencies and the related dates/periods valid to the referenced document where different to the reference currency.

4. Segments Description

CUX - M 1 - Currencies

This segment is used to provide currency rate of exchange information used to convert amounts specified in the MOA segment for the referenced document, to an amount expressed in terms of the remittance/payment currency. This CUX segment will only be used when the currency of its rate of exchange is different from the default global currency or its rate of exchange specified in the CUX segment at heading level.

DTM - C 1 - Date/time/period

This segment is used to specify any dates related to the currency information specified in the previous CUX segment.

SG19 - C 100 - **AJT-MOA-RFF**

A group of segments indicating adjustment amounts and their referenced documents.

AJT - M 1 - Adjustment details

This segment is used to indicate the reason for an adjustment to the current document.

MOA - M 1 - Monetary amount

This segment is used to indicate the value of the adjusted amount for the current document.

RFF - C 1 - Reference

This segment is used to specify any references associated with the adjusted amounts.

SG20 - C 1000 - **DLI-MOA-PIA-SG22**

A group of segments which may be used when required to provide details of individual line items in the reference document.

DLI - M 1 - Document line identification

This segment is used to identify individual line items within the document identified in the DOC segment.

MOA - M 5 - Monetary amount

This segment is used to indicate the line item amount and the amount remitted for the line item identified in the DLI segment for the current document.

PIA - C 5 - Additional product id

This segment is used to provide the product identification of the line item detailed in the DLI segment for the current document.

SG22 - C 10 - **AJT-MOA-RFF**

A group of segments indicating adjustment amounts and their referenced documents for this line item.

AJT - M 1 - Adjustment details

This segment is used to indicate the reason for an adjustment to the current line identified in the DLI segment.

MOA - M 1 - Monetary amount

This segment is used to indicate the value of the adjusted amount for the current line item.

RFF - C 1 - Reference

This segment is used to specify any references associated with the adjustment amounts for the current line item.

SG23 - C 1 - **GIS-MOA**

A group of segments indicating the end of the details of payment and specifying hash total amounts for control purposes.

4. Segments Description

GIS - M 1 - General indicator

This segment is used to indicate the end of the detail of payment.

MOA - C 5 - Monetary amount

This segment is used to indicate the total value level C for control purposes. The figure detailed here is simply an accumulation of the values specified in all MOA segments in level C regardless of the qualifiers used in DE 5025.

Multiple Payment Order Summary Section

CNT - C 5 - Control total

This segment is used to provide application data for message control purposes.

SG24 - C 5 - **AUT-DTM**

A group of segments specifying the details of any authentication (validation) procedure applied to the PAYMUL message.

AUT - M 1 - Authentication result

This segment is used to provide details of any authentication procedures which have been applied to the multiple payment order. The use of this segment is, including any algorithms and calculation procedures, dependent on bilaterally agreed conditions between the message sender and receiver.

DTM - C 1 - Date/time/period

This segment is used to provide details related to the date and where necessary, the time, of the multiple payment order validation.

UNT - M 1 - Message trailer

The UNT segment is a mandatory UN/EDIFACT segment. It must always be the last segment in the message.

5. Segments Layout

This section describes each segment used in the EANCOM® Multiple payment order message. The original EDIFACT segment layout is listed. The appropriate comments relevant to the EANCOM® subset are indicated.

Notes:

1. The segments are presented in the sequence in which they appear in the message. The segment or segment group tag is followed by the (M)andatory / (C)onditional indicator, the maximum number of occurrences and the segment description.

2. Reading from left to right, in column one, the data element tags and descriptions are shown, followed by in the second column the EDIFACT status (M or C), the field format, and the picture of the data elements. These first pieces of information constitute the original EDIFACT segment layout.

   Following the EDIFACT information, EANCOM® specific information is provided in the third, fourth, and fifth columns. In the third column a status indicator for the use of (C)onditional EDIFACT data elements (see 2.1 through 2.3 below), in the fourth column the restricted indicator (see point 3 on the following page), and in the fifth column notes and code values used for specific data elements in the message.

2.1 (M)andatory data elements in EDIFACT segments retain their status in EANCOM®.

2.2 Additionally, there are five types of status for data elements with a (C)onditional EDIFACT status, whether for simple, component or composite data elements. These are listed below and can be identified when relevant by the following abbreviations:

- REQUIRED	**R**	Indicates that the entity is required and must be sent.
- ADVISED	**A**	Indicates that the entity is advised or recommended.
- DEPENDENT	**D**	Indicates that the entity must be sent in certain conditions, as defined by the relevant explanatory note.
- OPTIONAL	**O**	Indicates that the entity is optional and may be sent at the discretion of the user.
- NOT USED	**N**	Indicates that the entity is not used and should be omitted.

2.3 If a composite is flagged as **N, NOT USED**, all data elements within that composite will have blank status indicators assigned to them.

3. Status indicators detailed in the fourth column which directly relate to the code values detailed in the fifth **column** may have two values:

- RESTRICTED	*****	A data element marked with an asterisk (*) in the fourth column indicates that the listed codes in column five are the only codes available for use with this data element, in this segment, in this message.
- OPEN		All data elements where coded representation of data is possible and a restricted set of code values is not indicated are open (no asterisk in fourth column). The available codes are listed in the EANCOM® Data Elements and Code Sets Directory. Code values may be given as examples or there may be a note on the format or type of code to be used.

4. Different colours are used for the code values in the segment details: restricted codes are in red and open codes in blue.

5. Segments Layout

Segment number: 1

UNH - M 1 - Message header

Function:

To head, identify and specify a message.

		EDIFACT	GS1	*	Description
0062	Message reference number	M an..14	**M**		Sender's unique message reference Sequence number of message in the interchange. DE 0062 in the UNT will have the same value. Sender generated.
S009	MESSAGE IDENTIFIER	M	**M**		
0065	Message type	M an..6	**M**	*	PAYMUL = Multiple payment order message
0052	Message version number	M an..3	**M**	*	D = Draft version/UN/EDIFACT Directory
0054	Message release number	M an..3	**M**	*	01B = Release 2001 - B
0051	Controlling agency	M an..2	**M**	*	UN = UN/CEFACT
0057	Association assigned code	C an..6	**R**	*	EAN003 = GS1 version control number (GS1 Permanent Code) Indicates that the message is the EANCOM version 003 of the UNSM Multiple Payment Order.
0068	Common access reference	C an..35	**N**		
S010	STATUS OF THE TRANSFER	C	**N**		
0070	Sequence of transfers	M n..2			
0073	First and last transfer	C a1			

Segment Notes:

This segment is used to head, identify and specify a message.
DE's 0065, 0052, 0054 and 0051: Indicate that the message is a UNSM Multiple Payment Order message based on the D.01B directory under the control of the United Nations.

Example:
UNH+ME0000001+PAYMUL:D:01B:UN:EAN003'

5. Segments Layout

Segment number: 2

BGM - M 1 - Beginning of message					
Function: To indicate the type and function of a message and to transmit the identifying number.					
		EDIFACT	GS1	*	Description
C002	DOCUMENT/MESSAGE NAME	C	**R**		
1001	Document name code	C an..3	**R**	*	452 = Multiple payment order
1131	Code list identification code	C an..17	**N**		
3055	Code list responsible agency code	C an..3	**N**		
1000	Document name	C an..35	**N**		
C106	DOCUMENT/MESSAGE IDENTIFICATION	C	**R**		
1004	Document identifier	C an..35	**R**		Multiple payment order number assigned by the document sender. The multiple payment order number will be passed to the party ordering the payment on the debit advice or in the statement for the transaction for reconciliation purposes together with the reference number provided in group 4. For the cancellation of a previously sent Multiple Payment Order message the FINCAN message should be used. For global unique identification of documents Global Document Type Identifier (GDTI) is available.
1056	Version identifier	C an..9	**N**		
1060	Revision identifier	C an..6	**N**		
1225	Message function code	C an..3	**R**	*	7 = Duplicate 9 = Original The message function coded, is a critical data element in this segment. It applies to all data indicated in the message. The following definitions apply for the restricted codes: 7 = Duplicate - The message is a duplicate of a previously generated Multiple payment order message. 9 = Original - The original transmission of a Multiple payment order.
4343	Response type code	C an..3	**N**		
Segment Notes: All references other than the document number DE 1004 should be put in the RFF segment. Example: BGM+452+233851+9'					

5. Segments Layout

Segment number: 3

DTM - M 1 - Date/time/period					
Function: To specify date, and/or time, or period.					
		EDIFACT	GS1	*	Description
C507	DATE/TIME/PERIOD	M	**M**		
2005	Date or time or period function code qualifier	M an..3	**M**	*	137 = Document/message date/time
2380	Date or time or period value	C an..35	**R**		
2379	Date or time or period format code	C an..3	**R**		102 = CCYYMMDD

Segment Notes:

This segment is used to specify the date on which the Multiple Payment Order message was created.
DE 2005: Identification of the 'Document/message date/time' (code value 137) is mandatory in an EANCOM message.

Example:
DTM+137:20020112:102'

5. Segments Layout

Segment number: 4

BUS	- C	1 - Business function			
Function: To provide information related to the processing and purpose of a financial message.					
		EDIFACT	GS1	*	Description
C521	BUSINESS FUNCTION	C	**N**		
4027	Business function type code qualifier	M an..3			
4025	Business function code	M an..3			
1131	Code list identification code	C an..17			
3055	Code list responsible agency code	C an..3			
4022	Business description	C an..70			
3279	Geographic area code	C an..3	**R**	*	DO = Domestic IN = International YC4 = European (SWIFT Code)
4487	Financial transaction type code	C an..3	**N**		
C551	BANK OPERATION	C	**N**		
4383	Bank operation code	M an..3			
1131	Code list identification code	C an..17			
3055	Code list responsible agency code	C an..3			
4463	Intra-company payment indicator code	C an..3	**N**		

Segment Notes:

This segment is used to indicate whether all of the payments contained in the message are Domestic, European, or International.

Example:
BUS++DO'

5. Segments Layout

Segment number: 5

SG2	- C	5 -	FII
FII	- M	1 -	Financial institution information

Function:

To identify an account and a related financial institution.

		EDIFACT	GS1	*	Description
3035	Party function code qualifier	M an..3	**M**	*	MR = Message recipient
C078	ACCOUNT HOLDER IDENTIFICATION	C	**N**		
3194	Account holder identifier	C an..35			
3192	Account holder name	C an..35			
3192	Account holder name	C an..35			
6345	Currency identification code	C an..3			
C088	INSTITUTION IDENTIFICATION	C	**R**		
3433	Institution name code	C an..11	**A**		
1131	Code list identification code	C an..17	**O**		25 = Bank identification
3055	Code list responsible agency code	C an..3	**D**		5 = ISO (International Organization for Standardization)
3434	Institution branch identifier	C an..17	**O**		
1131	Code list identification code	C an..17	**O**		
3055	Code list responsible agency code	C an..3	**D**		
3432	Institution name	C an..70	**O**		
3436	Institution branch location name	C an..70	**O**		
3207	Country name code	C an..3	**O**		ISO 3166 two alpha code

Segment Notes:

This segment is used to identify the receiving financial institution of the multiple payment order message.
The preferred way to identify a bank and its branch is in machine readable format using data elements 3433 and 3434. When using C088 it is recommended that if data element 3433 is not used that 3432 be used, and that when data element 3434 is not used that data element 3436 be used.

Example:
FII+MR++KREDBEBB:25:5'
The bank receiving the multiple payment order message is identified using the bank identification code KREDBEBB (which is maintained by ISO).

5. Segments Layout

Segment number: 6

SG3	- C	3 -	NAD
NAD	- M	1 -	Name and address

Function:

To specify the name/address and their related function, either by C082 only and/or unstructured by C058 or structured by C080 thru 3207.

		EDIFACT	GS1	*	Description
3035	Party function code qualifier	M an..3	**M**	*	MS = Document/message issuer/sender
C082	PARTY IDENTIFICATION DETAILS	C	**A**		
3039	Party identifier	M an..35	**M**		For identification of parties it is recommended to use GLN - Format n13.
1131	Code list identification code	C an..17	**O**		
3055	Code list responsible agency code	C an..3	**R**	*	9 = GS1
C058	NAME AND ADDRESS	C	**O**		This composite may only be used to fulfill the requirements of directive 2003/58/EC, article 4.
3124	Name and address description	M an..35	**M**		
3124	Name and address description	C an..35	**O**		
3124	Name and address description	C an..35	**O**		
3124	Name and address description	C an..35	**O**		
3124	Name and address description	C an..35	**O**		
C080	PARTY NAME	C	**D**		
3036	Party name	M an..35	**M**		Party name in clear text.
3036	Party name	C an..35	**O**		
3036	Party name	C an..35	**O**		
3036	Party name	C an..35	**O**		
3036	Party name	C an..35	**O**		
3045	Party name format code	C an..3	**O**		
C059	STREET	C	**D**		
3042	Street and number or post office box identifier	M an..35	**M**		Building Name/Number and Street Name
3042	Street and number or post office box identifier	C an..35	**O**		
3042	Street and number or post office box identifier	C an..35	**O**		
3042	Street and number or post office box identifier	C an..35	**O**		
3164	City name	C an..35	**D**		City/Town name, clear text
C819	COUNTRY SUB-ENTITY DETAILS	C	**D**		
3229	Country sub-entity name code	C an..9	**O**		
1131	Code list identification code	C an..17	**O**		
3055	Code list responsible agency code	C an..3	**O**		

5. Segments Layout

Segment number: 6

		EDIFACT	GS1	*	Description
3228	Country sub-entity name	C an..70	**O**		County/State, clear text.
3251	Postal identification code	C an..17	**D**		Postal code
3207	Country name code	C an..3	**D**		ISO 3166 two alpha code

Segment Notes:

This segment is used to identify the sender of the multiple payment order message.

Example:
NAD+MS+5422331123459::9'

Dependency Notes:
The following composites and data elements are only used when a coded name and address can not be used.
The affected composites and data elements are as follows;
C080 - C059 - 3164 - C819 - 3251 - 3207

5. Segments Layout

Segment number: 7

SG4	- M	9999	-	LIN-DTM-RFF-BUS-FCA-SG5-SG6-SG7-SG8-SG9-SG10-SG11
LIN	- M	1	-	Line item

Function:

To identify a line item and configuration.

		EDIFACT	GS1	*	Description
1082	Line item identifier	C an..6	**R**		Application generated number of the count of the lines in the multiple payment order.
1229	Action request/notification description code	C an..3	**N**		
C212	ITEM NUMBER IDENTIFICATION	C	**N**		
7140	Item identifier	C an..35			
7143	Item type identification code	C an..3			
1131	Code list identification code	C an..17			
3055	Code list responsible agency code	C an..3			
C829	SUB-LINE INFORMATION	C	**N**		
5495	Sub-line indicator code	C an..3			
1082	Line item identifier	C an..6			
1222	Configuration level number	C n..2	**N**		
7083	Configuration operation code	C an..3	**N**		

Segment Notes:

This segment is used to identify a line within the multiple payment order by means of a incrementing unique line number.
If Global Trade Item Numbers are available it is mandatory to use GTIN within the LIN segment.

Example:
LIN+1'

5. Segments Layout

Segment number: 8

SG4	- M	9999	-	LIN-DTM-RFF-BUS-FCA-SG5-SG6-SG7-SG8-SG9-SG10-SG11
DTM	- C	1	-	Date/time/period

Function:

To specify date, and/or time, or period.

		EDIFACT	GS1	*	Description
C507	DATE/TIME/PERIOD	M	**M**		
2005	Date or time or period function code qualifier	M an..3	**M**	*	203 = Execution date/time, requested
2380	Date or time or period value	C an..35	**R**		
2379	Date or time or period format code	C an..3	**R**		102 = CCYYMMDD

Segment Notes:

This segment is used to specify the requested execution date for the debit instruction contained in the multiple payment order.

Example:
DTM+203:20020112:102'

5. Segments Layout

Segment number: 9

SG4	- M	9999 -	LIN-DTM-RFF-BUS-FCA-SG5-SG6-SG7-SG8-SG9-SG10-SG11
RFF	- C	2 -	Reference

Function:

To specify a reference.

		EDIFACT	GS1	*	Description
C506	REFERENCE	M	**M**		
1153	Reference code qualifier	M an..3	**M**		AEK = Payment order number Code value 'AEK' is issued by the ordering customer to identify the debit entry and is used in subsequent messages in the payment chain.
1154	Reference identifier	C an..70	**R**		
1156	Document line identifier	C an..6	**N**		
4000	Reference version identifier	C an..35	**N**		
1060	Revision identifier	C an..6	**N**		

Segment Notes:

This segment is used to identify the reference number of the debit instruction. This number, along with the message number detailed in data element 1004 in the BGM segment, are passed back to the ordering customer in the debit advice (and multiple debit advice), banking status, and financial messages.

Example:
RFF+AEK:877212'

5. Segments Layout

Segment number: 10

SG4	- M	9999 -	LIN-DTM-RFF-BUS-FCA-SG5-SG6-SG7-SG8-SG9-SG10-SG11
BUS	- C	1 -	Business function

Function:

To provide information related to the processing and purpose of a financial message.

		EDIFACT	GS1	*	Description
C521	BUSINESS FUNCTION	C	**O**		
4027	Business function type code qualifier	M an..3	**M**	*	1 = Underlying business function
4025	Business function code	M an..3	**M**		COM = Commission COS = Costs GDS = Purchase and sale of goods INT = Interest NET = Netting PEN = Pension TAX = Tax payment AAN = Business expenses
1131	Code list identification code	C an..17	**O**		
3055	Code list responsible agency code	C an..3	**D**	*	9 = GS1
4022	Business description	C an..70	**O**		
3279	Geographic area code	C an..3	**R**	*	DO = Domestic IN = International YC4 = European (SWIFT Code)
4487	Financial transaction type code	C an..3	**O**	*	1 = Clean payment 4 = Documentary payment
C551	BANK OPERATION	C	**N**		
4383	Bank operation code	M an..3			
1131	Code list identification code	C an..17			
3055	Code list responsible agency code	C an..3			
4463	Intra-company payment indicator code	C an..3	**O**	*	1 = Intra-company payment

Segment Notes:

This segment is used to identify the characteristics of the payment orders detailed in level C of the message. The contents of this segment will be transferred unchanged to the beneficiary of the multiple payment order.
When this segment is not used the message defaults to a non-intra company domestic clean payment.

Example:
BUS+1:GDS+IN'
The multiple payment order relates to a clean international payment for the purchase/sale of goods.

5. Segments Layout

Segment number: 11

SG4	- M	9999 -	LIN-DTM-RFF-BUS-FCA-SG5-SG6-SG7-SG8-SG9-SG10-SG11
FCA	- C	1 -	Financial charges allocation

Function:

Description of allocation of charges.

		EDIFACT	GS1	*	Description
4471	Settlement means code	M an..3	**M**	*	13 = All charges borne by payee 14 = Each pay own cost 15 = All charges borne by payor When using code value '15' in this data element it is not recommended that C878 be used.
C878	CHARGE/ALLOWANCE ACCOUNT	C	**D**		Composite data element C878 should only be provided if the account number against which charges are to be allocated are different to the ordering customers account (debit account) number.
3434	Institution branch identifier	M an..17	**M**		
1131	Code list identification code	C an..17	**O**		25 = Bank identification 154 = Bank branch sorting identification
3055	Code list responsible agency code	C an..3	**D**		5 = ISO (International Organization for Standardization)
3194	Account holder identifier	C an..35	**O**		If this data element is not used the primary account (i.e. the ordered bank account) specified in the FII segment should be used.
6345	Currency identification code	C an..3	**O**		ISO 4217 three alpha

Segment Notes:

This segment is used to identify the party on which any charges are allocated and the account (of the ordering customer) to which the charges should be directed.

Example:
FCA+15'

5. Segments Layout

Segment number: 12

SG4	- M	9999 -	LIN-DTM-RFF-BUS-FCA-SG5-SG6-SG7-SG8-SG9-SG10-SG11
SG5	- C	1 -	MOA-CUX-DTM-RFF
MOA	- M	1 -	Monetary amount

Function:

To specify a monetary amount.

		EDIFACT	GS1	*	Description
C516	MONETARY AMOUNT	M	**M**		
5025	Monetary amount type code qualifier	M an..3	**M**	*	9 = Amount due/amount payable 57 = Equivalent amount When code 57 (equivalent amount) is used in this data element it is used to instruct a bank to debit an account by a specified amount of the account currency and to credit the beneficiary's account by an equivalent amount in a currency specified in the CUX segment.
5004	Monetary amount	C n..35	**R**		
6345	Currency identification code	C an..3	**A**		ISO 4217 three alpha code
6343	Currency type code qualifier	C an..3	**N**		
4405	Status description code	C an..3	**N**		

Segment Notes:

This segment is used to specify the payment amount for the debit instruction.

Example:
MOA+9:50000:EUR'

5. Segments Layout

Segment number: 13

SG4	- M	9999 -	LIN-DTM-RFF-BUS-FCA-SG5-SG6-SG7-SG8-SG9-SG10-SG11
SG5	- C	1 -	MOA-CUX-DTM-RFF
CUX	- C	1 -	Currencies

Function:

To specify currencies used in the transaction and relevant details for the rate of exchange.

		EDIFACT	GS1	*	Description
C504	CURRENCY DETAILS	C	**R**		
6347	Currency usage code qualifier	M an..3	**M**	*	2 = Reference currency Reference currency = Debit currency Target currency = Credit currency
6345	Currency identification code	C an..3	**R**		ISO 4217 three alpha
6343	Currency type code qualifier	C an..3	**N**		
6348	Currency rate value	C n..4	**D**		
C504	CURRENCY DETAILS	C	**D**		The second occurrence of this composite is only used if a target currency is being specified.
6347	Currency usage code qualifier	M an..3	**M**	*	3 = Target currency
6345	Currency identification code	C an..3	**R**		ISO 4217 three alpha
6343	Currency type code qualifier	C an..3	**N**		
6348	Currency rate value	C n..4	**D**		
5402	Currency exchange rate	C n..12	**D**		The rate of exchange which applies to the currency. The rate of exchange is only used if a target currency has been identified in the second occurrence of C504.
6341	Exchange rate currency market identifier	C an..3	**N**		

Segment Notes:

This segment is used to specify the currency of the monetary amount detailed in the previous MOA segment.
The CUX segment is only used if code 57 (Equivalent amount) has been used in data element 5025 of the previous MOA segment. The currency information is required only by the ordering customer and its bank.
When specifying the Reference and Target currencies for international trade, one occurrence of CUX is all that is required. The reference currency is identified in the first occurrence of composite C504, with the target currency specified in the second occurrence of C504. The rate of exchange between the two is detailed in DE 5402.
The general rule for calculating the rate of exchange is as follows;
Reference Currency multiplied by Rate = Target Currency.

Example:
CUX+2:EUR+3:USD+0.90243'

Dependency Notes:
6348: These data elements are only used when a rate of exchange is provided in data element 5402. When a rate of exchange is provided then at least one currency rate base must be specified.

5. Segments Layout

Segment number: 14

SG4	- M	9999 -	LIN-DTM-RFF-BUS-FCA-SG5-SG6-SG7-SG8-SG9-SG10-SG11
SG5	- C	1 -	MOA-CUX-DTM-RFF
DTM	- C	2 -	Date/time/period

Function:

To specify date, and/or time, or period.

		EDIFACT	GS1	*	Description
C507	DATE/TIME/PERIOD	M	**M**		
2005	Date or time or period function code qualifier	M an..3	**M**	*	134 = Rate of exchange date/time 171 = Reference date/time
2380	Date or time or period value	C an..35	**R**		
2379	Date or time or period format code	C an..3	**R**		102 = CCYYMMDD

Segment Notes:

This segment is used to specify reference and rate of exchange dates.

Example:
DTM+134:20020525:102'

5. Segments Layout

Segment number: 15

SG4	- M	9999 -	LIN-DTM-RFF-BUS-FCA-SG5-SG6-SG7-SG8-SG9-SG10-SG11
SG5	- C	1 -	MOA-CUX-DTM-RFF
RFF	- C	1 -	Reference

Function:

To specify a reference.

		EDIFACT	GS1	*	Description
C506	REFERENCE	M	**M**		
1153	Reference code qualifier	M an..3	**M**	*	ACX = Banker's acceptance ADB = Matured certificate of deposit ADC = Loan FX = Foreign exchange contract number
1154	Reference identifier	C an..70	**R**		
1156	Document line identifier	C an..6	**N**		
4000	Reference version identifier	C an..35	**N**		
1060	Revision identifier	C an..6	**N**		

Segment Notes:

This segment is used to provide references to other transactions negotiated between the ordering customer and the ordered bank which will be used to finance the multiple payment order, e.g. a separate foreign exchange deal.

Example:
RFF+ADC:6842'

5. Segments Layout

Segment number: 16

SG4	- M	9999 -	LIN-DTM-RFF-BUS-FCA-SG5-SG6-SG7-SG8-SG9-SG10-SG11
SG6	- M	2 -	FII
FII	- M	1 -	Financial institution information

Function:

To identify an account and a related financial institution.

		EDIFACT	GS1	*	Description
3035	Party function code qualifier	M an..3	**M**	*	OR = Ordered bank
C078	ACCOUNT HOLDER IDENTIFICATION	C	**R**		
3194	Account holder identifier	C an..35	**R**		Account number to be debited.
3192	Account holder name	C an..35	**O**		
3192	Account holder name	C an..35	**O**		
6345	Currency identification code	C an..3	**O**		ISO 4217 three alpha
C088	INSTITUTION IDENTIFICATION	C	**D**		In some countries it is possible to identify within the account number the institution name and branch. Where this is possible the composite C088 will not be required. For international transactions it is recommended that the need for composite C088 should be checked before sending the message.
3433	Institution name code	C an..11	**A**		
1131	Code list identification code	C an..17	**O**		25 = Bank identification
3055	Code list responsible agency code	C an..3	**D**		5 = ISO (International Organization for Standardization)
3434	Institution branch identifier	C an..17	**O**		
1131	Code list identification code	C an..17	**O**		
3055	Code list responsible agency code	C an..3	**D**		
3432	Institution name	C an..70	**O**		
3436	Institution branch location name	C an..70	**O**		
3207	Country name code	C an..3	**O**		ISO 3166 two alpha code

Segment Notes:

This segment is used to identify the financial institution and account information related to the ordering customer (payor) for the debit instruction.
The preferred way to identify a bank and its branch is in machine readable format using data elements 3433 and 3434. When using C088 it is recommended that if data element 3433 is not used that 3432 be used, and that when data element 3434 is not used that data element 3436 be used.

Example:
FII+OR+994-3277711:N GEISS'
The ordering customer is identified as being N Geiss with a bank account number of 994-3277711.

5. Segments Layout

Segment number: 17

SG4	- M	9999 -	LIN-DTM-RFF-BUS-FCA-SG5-SG6-SG7-SG8-SG9-SG10-SG11
SG7	- C	3 -	NAD-CTA-COM
NAD	- M	1 -	Name and address

Function:

To specify the name/address and their related function, either by C082 only and/or unstructured by C058 or structured by C080 thru 3207.

		EDIFACT	GS1	*	Description
3035	Party function code qualifier	M an..3	**M**		OY = Ordering customer
C082	PARTY IDENTIFICATION DETAILS	C	**A**		
3039	Party identifier	M an..35	**M**		For identification of parties it is recommended to use GLN - Format n13.
1131	Code list identification code	C an..17	**O**		
3055	Code list responsible agency code	C an..3	**R**	*	9 = GS1
C058	NAME AND ADDRESS	C	**O**		This composite may only be used to fulfill the requirements of directive 2003/58/EC, article 4.
3124	Name and address description	M an..35	**M**		
3124	Name and address description	C an..35	**O**		
3124	Name and address description	C an..35	**O**		
3124	Name and address description	C an..35	**O**		
3124	Name and address description	C an..35	**O**		
C080	PARTY NAME	C	**D**		
3036	Party name	M an..35	**M**		Party name in clear text.
3036	Party name	C an..35	**O**		
3036	Party name	C an..35	**O**		
3036	Party name	C an..35	**O**		
3036	Party name	C an..35	**O**		
3045	Party name format code	C an..3	**O**		
C059	STREET	C	**D**		
3042	Street and number or post office box identifier	M an..35	**M**		Building Name/Number and Street Name
3042	Street and number or post office box identifier	C an..35	**O**		
3042	Street and number or post office box identifier	C an..35	**O**		
3042	Street and number or post office box identifier	C an..35	**O**		
3164	City name	C an..35	**D**		City/Town name, clear text
C819	COUNTRY SUB-ENTITY DETAILS	C	**D**		
3229	Country sub-entity name code	C an..9	**O**		
1131	Code list identification code	C an..17	**O**		
3055	Code list responsible agency	C an..3	**O**		

5. Segments Layout

Segment number: 17

		EDIFACT	GS1	*	Description
	code				
3228	Country sub-entity name	C an..70	**O**		County/State, clear text.
3251	Postal identification code	C an..17	**D**		Postal code
3207	Country name code	C an..3	**D**		ISO 3166 two alpha code

Segment Notes:

This segment is used to identify the ordering customer for the debit instruction.

Example:
NAD+OY+5422331123459::9'

Dependency Notes:
The following composites and data elements are only used when a coded name and address can not be used.
The affected composites and data elements are as follows;
C080 - C059 - 3164 - C819 - 3251 - 3207

5. Segments Layout

Segment number: 18

SG4	- M	9999 -	LIN-DTM-RFF-BUS-FCA-SG5-SG6-SG7-SG8-SG9-SG10-SG11
SG7	- C	3 -	NAD-CTA-COM
CTA	- C	1 -	Contact information

Function:

To identify a person or a department to whom communication should be directed.

		EDIFACT	GS1	*	Description
3139	Contact function code	C an..3	**R**		IC = Information contact
C056	DEPARTMENT OR EMPLOYEE DETAILS	C	**O**		
3413	Department or employee name code	C an..17	**O**		
3412	Department or employee name	C an..35	**O**		

Segment Notes:

This segment is used to provide contact details relevant for the party identified in the previous NAD segment.

Example:
CTA+IC+:T. WRIGHT'

5. Segments Layout

Segment number: 19

SG4	- M	9999 -	LIN-DTM-RFF-BUS-FCA-SG5-SG6-SG7-SG8-SG9-SG10-SG11
SG7	- C	3 -	NAD-CTA-COM
COM	- C	5 -	Communication contact

Function:

To identify a communication number of a department or a person to whom communication should be directed.

		EDIFACT	GS1	*	Description
C076	COMMUNICATION CONTACT	M	**M**		
3148	Communication address identifier	M an..512	**M**		
3155	Communication address code qualifier	M an..3	**M**		CA = Cable address EI = EDI EM = Electronic mail TE = Telephone WWW = WWW-Site (GS1 Temporary Code)

Segment Notes:

This segment is used to provide communications details relevant to the contact identified in the CTA segment.

Example:
COM+003212187674:FX'

5. Segments Layout

Segment number: 20

SG4	- M	9999	-	LIN-DTM-RFF-BUS-FCA-SG5-SG6-SG7-SG8-SG9-SG10-SG11
SG8	- C	1	-	INP-FTX-DTM
INP	- M	1	-	Parties and instruction

Function:

To specify parties to an instruction, the instruction, or both.

		EDIFACT	GS1	*	Description
C849	PARTIES TO INSTRUCTION	C	**A**		
3301	Enacting party identifier	M an..35	**M**		3 = Beneficiary's bank YC7 = Ordered bank (SWIFT Code)
3285	Instruction receiving party identifier	C an..35	**O**		4 = Beneficiary 5 = Contact party 1 YC5 = Ordered bank (SWIFT Code)
C522	INSTRUCTION	C	**O**		
4403	Instruction type code qualifier	M an..3	**M**		1 = Action required
4401	Instruction description code	C an..3	**O**		AD = Advise AP = Advise by phone AJ = Advise by fax (SWIFT Code) EX = Expedite
1131	Code list identification code	C an..17	**O**		
3055	Code list responsible agency code	C an..3	**D**		
4400	Instruction description	C an..35	**N**		
C850	STATUS OF INSTRUCTION	C	**N**		
4405	Status description code	M an..3			
3036	Party name	C an..35			
1229	Action request/notification description code	C an..3	**N**		

Segment Notes:

This segment is used to identify the party who must carry out an instruction from the ordering customer, and the party to whom the instruction is intended.
DE's 3301 and 3285: As these data elements are being used to provide coded information it is recommended that their format and length be restricted to an..3.

Example:
INP+3:4+1:AP'

5. Segments Layout

Segment number: 21

SG4	- M	9999 -	LIN-DTM-RFF-BUS-FCA-SG5-SG6-SG7-SG8-SG9-SG10-SG11
SG8	- C	1 -	INP-FTX-DTM
FTX	- C	1 -	Free text

Function:

To provide free form or coded text information.

		EDIFACT	GS1	*	Description
4451	Text subject code qualifier	M an..3	**M**		AAG = Party instructions
4453	Free text function code	C an..3	**N**		
C107	TEXT REFERENCE	C	**D**		This composite is only used when trading partners have agreed to use mutually defined code values.
4441	Free text value code	M an..17	**M**		Coded reference to standard text between partners.
1131	Code list identification code	C an..17	**O**		
3055	Code list responsible agency code	C an..3	**D**		86 = Assigned by party originating the message
C108	TEXT LITERAL	C	**D**		This composite is only used if coded text can not be used.
4440	Free text value	M an..512	**M**		
4440	Free text value	C an..512	**O**		
4440	Free text value	C an..512	**O**		
4440	Free text value	C an..512	**O**		
4440	Free text value	C an..512	**O**		
3453	Language name code	C an..3	**D**		ISO 639 two alpha code. This data element is only used when non coded free text has been provided in data element C108.
4447	Free text format code	C an..3	**N**		

Segment Notes:

This segment is used to provide additional coded or free text instructions to those provided in the INP segment. Use of this segment in free form is not recommended since in most cases it inhibits automatic processing of the multiple payment order. Coded references to standard texts is an available functionality which enables automatic processing and reduces transmission and processing overheads. Standard texts should be mutually defined among trading partners and can be used to cover legal and other requirements.

Example:
FTX+AAG+++IF INSUFFICIENT FUNDS IN NUMBER 1 ACCOUNT USE NUMBER 2'

5. Segments Layout

Segment number: 22

SG4	- M	9999	-	LIN-DTM-RFF-BUS-FCA-SG5-SG6-SG7-SG8-SG9-SG10-SG11
SG8	- C	1	-	INP-FTX-DTM
DTM	- C	2	-	Date/time/period

Function:

To specify date, and/or time, or period.

		EDIFACT	GS1	*	Description
C507	DATE/TIME/PERIOD	M	**M**		
2005	Date or time or period function code qualifier	M an..3	**M**	*	174 = Advise after date/time 175 = Advise before date/time 177 = Advise on date/time
2380	Date or time or period value	C an..35	**R**		
2379	Date or time or period format code	C an..3	**R**		102 = CCYYMMDD

Segment Notes:

This segment is used to specify the earliest and latest dates by which the instructions must be carried out.

Example:
DTM+175:200206171000:203'
Advise before 10am on the 17th of June 2002.

5. Segments Layout

Segment number: 23

SG4	- M	9999	-	LIN-DTM-RFF-BUS-FCA-SG5-SG6-SG7-SG8-SG9-SG10-SG11
SG9	- C	10	-	GIS-MOA-LOC-NAD-RCS-FTX
GIS	- M	1	-	General indicator

Function:

To transmit a processing indicator.

Notes:
1. This segment will be removed effective with directory D.02B.

		EDIFACT	GS1	*	Description
C529	PROCESSING INDICATOR	M	**M**		
7365	Processing indicator description code	M an..3	**M**	*	10 = Declaration requested 37 = Complete information
1131	Code list identification code	C an..17	**N**		
3055	Code list responsible agency code	C an..3	**N**		
7187	Process type description code	C an..17	**O**		

Segment Notes:

This segment is used to indicate that the information contained in the following segments will be passed on to and processed by the central and regulatory party identified in the NAD segment.
Note: The use of this segment group is subject to national regulations stipulated by regulatory authorities, e.g. Central Bank.

Example:
GIS+10'

5. Segments Layout

Segment number: 24

SG4	- M	9999 -	LIN-DTM-RFF-BUS-FCA-SG5-SG6-SG7-SG8-SG9-SG10-SG11
SG9	- C	10 -	GIS-MOA-LOC-NAD-RCS-FTX
MOA	- C	1 -	Monetary amount

Function:

To specify a monetary amount.

		EDIFACT	GS1	*	Description
C516	MONETARY AMOUNT	M	**M**		
5025	Monetary amount type code qualifier	M an..3	**M**		139 = Total payment amount
5004	Monetary amount	C n..35	**R**		
6345	Currency identification code	C an..3	**O**		ISO 4217 three alpha code
6343	Currency type code qualifier	C an..3	**O**		11 = Payment currency
4405	Status description code	C an..3	**N**		

Segment Notes:

This segment is used to specify monetary amounts which must be reported to the regulatory party identified in the NAD segment.

Example:
MOA+139:125000:EUR:11'

5. Segments Layout

Segment number: 25

SG4	- M	9999	-	LIN-DTM-RFF-BUS-FCA-SG5-SG6-SG7-SG8-SG9-SG10-SG11
SG9	- C	10	-	GIS-MOA-LOC-NAD-RCS-FTX
LOC	- C	2	-	Place/location identification

Function:

To identify a place or a location and/or related locations.

		EDIFACT	GS1	*	Description
3227	Location function code qualifier	M an..3	**M**		27 = Country of origin 28 = Country of destination of goods 39 = Country of production 40 = Country of trading
C517	LOCATION IDENTIFICATION	C	**A**		
3225	Location name code	C an..25	**A**		For country identification see ISO 3166 two alpha code, DE 3207.
1131	Code list identification code	C an..17	**O**		
3055	Code list responsible agency code	C an..3	**D**		5 = ISO (International Organization for Standardization) 9 = GS1 DE 3055 must be used if DE 3225 is used and does not contain an UN/LOCODE.
3224	Location name	C an..256	**O**		
C519	RELATED LOCATION ONE IDENTIFICATION	C	**N**		
3223	First related location name code	C an..25			
1131	Code list identification code	C an..17			
3055	Code list responsible agency code	C an..3			
3222	First related location name	C an..70			
C553	RELATED LOCATION TWO IDENTIFICATION	C	**N**		
3233	Second related location name code	C an..25			
1131	Code list identification code	C an..17			
3055	Code list responsible agency code	C an..3			
3232	Second related location name	C an..70			
5479	Relation code	C an..3	**N**		

Segment Notes:

This segment is used to indicate any locations relevant to the regulatory party identified in the NAD segment.

Example:
LOC+39+BE::5'
Goods were produced in Belgium.

5. Segments Layout

Segment number: 26

SG4	- M	9999 -	LIN-DTM-RFF-BUS-FCA-SG5-SG6-SG7-SG8-SG9-SG10-SG11
SG9	- C	10 -	GIS-MOA-LOC-NAD-RCS-FTX
NAD	- C	1 -	Name and address

Function:

To specify the name/address and their related function, either by C082 only and/or unstructured by C058 or structured by C080 thru 3207.

		EDIFACT	GS1	*	Description
3035	Party function code qualifier	M an..3	**M**	*	RA = Central bank or regulatory authority
C082	PARTY IDENTIFICATION DETAILS	C	**A**		
3039	Party identifier	M an..35	**M**		For identification of parties it is recommended to use GLN - Format n13.
1131	Code list identification code	C an..17	**O**		
3055	Code list responsible agency code	C an..3	**R**	*	9 = GS1
C058	NAME AND ADDRESS	C	**O**		This composite may only be used to fulfill the requirements of directive 2003/58/EC, article 4.
3124	Name and address description	M an..35	**M**		
3124	Name and address description	C an..35	**O**		
3124	Name and address description	C an..35	**O**		
3124	Name and address description	C an..35	**O**		
3124	Name and address description	C an..35	**O**		
C080	PARTY NAME	C	**D**		
3036	Party name	M an..35	**M**		Party name in clear text.
3036	Party name	C an..35	**O**		
3036	Party name	C an..35	**O**		
3036	Party name	C an..35	**O**		
3036	Party name	C an..35	**O**		
3045	Party name format code	C an..3	**O**		
C059	STREET	C	**D**		
3042	Street and number or post office box identifier	M an..35	**M**		Building Name/Number and Street
3042	Street and number or post office box identifier	C an..35	**O**		Name and/or P.O. Box.
3042	Street and number or post office box identifier	C an..35	**O**		
3042	Street and number or post office box identifier	C an..35	**O**		
3164	City name	C an..35	**D**		City/town name, clear text.
C819	COUNTRY SUB-ENTITY DETAILS	C	**D**		
3229	Country sub-entity name code	C an..9	**O**		
1131	Code list identification code	C an..17	**O**		
3055	Code list responsible agency	C an..3	**O**		

5. Segments Layout

Segment number: 26

		EDIFACT	GS1	*	Description
	code				
3228	Country sub-entity name	C an..70	**O**		County/State, clear text.
3251	Postal identification code	C an..17	**D**		Postal code.
3207	Country name code	C an..3	**D**		ISO 3166 two alpha code

Segment Notes:

This segment is used to identify the central and regulatory authority specifying the regulatory information detailed in the GIS and FTX segments.

Example:
NAD+RA+5422331123459::9'

Dependency Notes:
The following composites and data elements are only used when a coded name and address can not be used.
The affected composites and data elements are as follows;
C080 - C059 - 3164 - C819 - 3251 - 3207

5. Segments Layout

Segment number: 27

SG4	- M	9999 -	LIN-DTM-RFF-BUS-FCA-SG5-SG6-SG7-SG8-SG9-SG10-SG11
SG9	- C	10 -	GIS-MOA-LOC-NAD-RCS-FTX
RCS	- C	1 -	Requirements and conditions

Function:

To specify sector/subject requirements and conditions.

		EDIFACT	GS1	*	Description
7293	Sector area identification code qualifier	M an..3	**M**	*	25 = Banking sector
C550	REQUIREMENT/CONDITION IDENTIFICATION	C	**A**		
7295	Requirement or condition description identifier	M an..17	**M**		As no EDIFACT code values exist for this data element it is recommended that nationally agreed codes be formulated to identify the requirements and conditions possible due to regulatory requirements.
1131	Code list identification code	C an..17	**O**		
3055	Code list responsible agency code	C an..3	**D**		86 = Assigned by party originating the message
7294	Requirement or condition description	C an..35	**O**		
1229	Action request/notification description code	C an..3	**N**		
3207	Country name code	C an..3	**N**		

Segment Notes:

This segment is used to indicate any requirements and conditions related to the transaction which is being reported to the regulatory authorities.

Example:
RCS+25+AB1::86'
Code assigned by the message sender indicating that the requirements and conditions relate to regulatory requirements to report the payment of amount in excess of a certain amount.

5. Segments Layout

Segment number: 28

SG4	- M	9999 -	LIN-DTM-RFF-BUS-FCA-SG5-SG6-SG7-SG8-SG9-SG10-SG11
SG9	- C	10 -	GIS-MOA-LOC-NAD-RCS-FTX
FTX	- C	10 -	Free text

Function:

To provide free form or coded text information.

		EDIFACT	GS1	*	Description
4451	Text subject code qualifier	M an..3	**M**	*	REG = Regulatory information
4453	Free text function code	C an..3	**N**		
C107	TEXT REFERENCE	C	**D**		This composite is only used when trading partners have agreed to use mutually defined code values.
4441	Free text value code	M an..17	**M**		A code identifying standard text agreed between partners.
1131	Code list identification code	C an..17	**O**		
3055	Code list responsible agency code	C an..3	**D**		
C108	TEXT LITERAL	C	**D**		This composite is only used if coded text can not be used.
4440	Free text value	M an..512	**M**		
4440	Free text value	C an..512	**O**		
4440	Free text value	C an..512	**O**		
4440	Free text value	C an..512	**O**		
4440	Free text value	C an..512	**O**		
3453	Language name code	C an..3	**D**		ISO 639 two alpha code. This data element is only used when non coded free text has been provided in data element C108.
4447	Free text format code	C an..3	**N**		

Segment Notes:

This segment is used to provide free or coded text information required by the regulatory authorities. The form and content of this segment is dependent upon the central bank or regulatory authority's requirements.
Use of this segment in free form is not recommended since in most cases it inhibits automatic processing of the multiple payment order. Coded references to standard texts is an available functionality which enables automatic processing and reduces transmission and processing overheads. Standard texts should be mutually defined among trading partners and can be used to cover legal and other requirements.

Example:
FTX+REG+++SUBJECT TO EUROPEAN CENTRAL BANK REGULATIONS'

5. Segments Layout

Segment number: 29

SG4	- M	9999	-	LIN-DTM-RFF-BUS-FCA-SG5-SG6-SG7-SG8-SG9-SG10-SG11
SG10	- C	1	-	PRC-FTX
PRC	- M	1	-	Process identification

Function:

To identify a process.

		EDIFACT	GS1	*	Description
C242	PROCESS TYPE AND DESCRIPTION	C	**R**		
7187	Process type description code	M an..17	**M**	*	11 = Processing of unstructured information The information following this segment is presented in an unstructured format using the following FTX segment.
1131	Code list identification code	C an..17	**N**		
3055	Code list responsible agency code	C an..3	**N**		
7186	Process type description	C an..35	**N**		
7186	Process type description	C an..35	**N**		
C830	PROCESS IDENTIFICATION DETAILS	C	**N**		
7191	Process description code	C an..17			
1131	Code list identification code	C an..17			
3055	Code list responsible agency code	C an..3			
7190	Process description	C an..70			

Segment Notes:

This segment is used to provide processing information for each beneficiary of the debit instructions.

Example:
PRC+11'

5. Segments Layout

Segment number: 30

SG4	- M	9999 -	LIN-DTM-RFF-BUS-FCA-SG5-SG6-SG7-SG8-SG9-SG10-SG11
SG10	- C	1 -	PRC-FTX
FTX	- M	1 -	Free text

Function:

To provide free form or coded text information.

		EDIFACT	GS1	*	Description
4451	Text subject code qualifier	M an..3	**M**		PMD = Payment detail/remittance information
4453	Free text function code	C an..3	**N**		
C107	TEXT REFERENCE	C	**D**		This composite is only used when trading partners have agreed to use mutually defined code values.
4441	Free text value code	M an..17	**M**		A code identifying standard text agreed between trading partners.
1131	Code list identification code	C an..17	**O**		
3055	Code list responsible agency code	C an..3	**D**		
C108	TEXT LITERAL	C	**D**		This composite is only used if coded text can not be used.
4440	Free text value	M an..512	**M**		
4440	Free text value	C an..512	**O**		
4440	Free text value	C an..512	**O**		
4440	Free text value	C an..512	**O**		
4440	Free text value	C an..512	**O**		
3453	Language name code	C an..3	**D**		ISO 639 two alpha code. This data element is only used when non coded free text has been provided in data element C108.
4447	Free text format code	C an..3	**N**		

Segment Notes:

This segment is used to provide free or coded text information related to the processing of the payment.
Use of this segment in free form is not recommended since in most cases it inhibits automatic processing of the multiple payment order. Coded references to standard texts is an available functionality which enables automatic processing and reduces transmission and processing overheads. Standard texts should be mutually defined among trading partners and can be used to cover legal and other requirements.

Example:
FTX+PMD+++SALARY JAN 1995'

5. Segments Layout

Segment number: 31

SG4	- M	9999	-	LIN-DTM-RFF-BUS-FCA-SG5-SG6-SG7-SG8-SG9-SG10-SG11
SG11	- M	99999	-	SEQ-MOA-DTM-RFF-PAI-FCA-SG12-SG13-SG14-SG15-SG16
SEQ	- M	1	-	Sequence details

Function:

To provide details relating to the sequence.

		EDIFACT	GS1	*	Description
1229	Action request/notification description code	C an..3	**N**		
C286	SEQUENCE INFORMATION	C	**R**		
1050	Sequence position identifier	M an..10	**M**		
1159	Sequence identifier source code	C an..3	**N**		
1131	Code list identification code	C an..17	**N**		
3055	Code list responsible agency code	C an..3	**N**		

Segment Notes:

This segment is used to identify the start of the credit side of the transaction (level C) by means of a sequence number within the current line number. The sequence number should be reset to one for each occurrence of a new line number (in LIN segment).

Example:
SEQ++1'

5. Segments Layout

Segment number: 32

SG4	- M	9999 -	LIN-DTM-RFF-BUS-FCA-SG5-SG6-SG7-SG8-SG9-SG10-SG11
SG11	- M	99999 -	SEQ-MOA-DTM-RFF-PAI-FCA-SG12-SG13-SG14-SG15-SG16
MOA	- M	1 -	Monetary amount

Function:

To specify a monetary amount.

		EDIFACT	GS1	*	Description
C516	MONETARY AMOUNT	M	**M**		
5025	Monetary amount type code qualifier	M an..3	**M**	*	9 = Amount due/amount payable 57 = Equivalent amount
5004	Monetary amount	C n..35	**R**		
6345	Currency identification code	C an..3	**A**		ISO 4217 three alpha code When code value '9' is used in data element 5025 then the currency code specified in data element 6345 must be the same as that specified in DE 6345 of the MOA segment in segment group 5.
6343	Currency type code qualifier	C an..3	**N**		
4405	Status description code	C an..3	**N**		

Segment Notes:

This segment is used to specify the payment amount for the credit instruction.

Example:
MOA+9:50000:EUR'

5. Segments Layout

Segment number: 33

SG4	- M	9999 -	LIN-DTM-RFF-BUS-FCA-SG5-SG6-SG7-SG8-SG9-SG10-SG11
SG11	- M	99999 -	SEQ-MOA-DTM-RFF-PAI-FCA-SG12-SG13-SG14-SG15-SG16
DTM	- C	1 -	Date/time/period

Function:

To specify date, and/or time, or period.

		EDIFACT	GS1	*	Description
C507	DATE/TIME/PERIOD	M	**M**		
2005	Date or time or period function code qualifier	M an..3	**M**	*	140 = Payment due date 227 = Beneficiary's banks due date This code 140 identifies the date on which the funds should be made available to the beneficiary.
2380	Date or time or period value	C an..35	**R**		
2379	Date or time or period format code	C an..3	**R**		102 = CCYYMMDD

Segment Notes:

This segment is used to specify dates relevant to the beneficiary's side of the credit instruction.

Example:
DTM+227:20020115:102'

5. Segments Layout

Segment number: 34

SG4	- M	9999 -	LIN-DTM-RFF-BUS-FCA-SG5-SG6-SG7-SG8-SG9-SG10-SG11
SG11	- M	99999 -	SEQ-MOA-DTM-RFF-PAI-FCA-SG12-SG13-SG14-SG15-SG16
RFF	- C	3 -	Reference

Function:

To specify a reference.

		EDIFACT	GS1	*	Description
C506	REFERENCE	M	**M**		
1153	Reference code qualifier	M an..3	**M**		CR = Customer reference number PQ = Payment reference RA = Remittance advice number The code 'CR' is issued by the ordering customer for use by the banks to uniquely identify the credit transaction. This number may be quoted by the banks in subsequent messages in the payment chain. The code 'PQ' is issued by the ordering customer and passed to the beneficiary to uniquely identify the transaction for reconciliation purposes. When the code value 'RA' is used in this segment it will always relate to an external remittance advice which has been issued by the ordering party and communicated directly between two trading partners. It is recommended that only one remittance advice be specified per level C.
1154	Reference identifier	C an..70	**R**		
1156	Document line identifier	C an..6	**N**		
4000	Reference version identifier	C an..35	**N**		
1060	Revision identifier	C an..6	**N**		

Segment Notes:

This segment is used to identify any references related to the payment order.
Should there be a requirement to cancel a payment order then the DE 1004 value from the BGM segment, the reference in group 4, and the reference in group 11 must be provided in the FINCAN message to ensure cancellation of the correct payment order.

Example:
RFF+PQ:855144'

5. Segments Layout

Segment number: 35

SG4	- M	9999 -	LIN-DTM-RFF-BUS-FCA-SG5-SG6-SG7-SG8-SG9-SG10-SG11
SG11	- M	99999 -	SEQ-MOA-DTM-RFF-PAI-FCA-SG12-SG13-SG14-SG15-SG16
PAI	- C	1 -	Payment instructions

Function:

To specify the instructions for payment.

		EDIFACT	GS1	*	Description
C534	PAYMENT INSTRUCTION DETAILS	M	**M**		
4439	Payment conditions code	C an..3	**N**		
4431	Payment guarantee means code	C an..3	**N**		
4461	Payment means code	C an..3	**R**		10 = In cash 21 = Banker's draft 23 = Bank cheque (issued by a banking or similar establishment) 26 = Local cheque 50 = Payment by postgiro If the multiple payment order message is used to order the ordering customers bank to issue a cheque to the beneficiary then it is recommended that one of the code values '23', '26', and '50' in data element 4461 is used. The identification of the beneficiary is carried out in the NAD segment in group 13.
1131	Code list identification code	C an..17	**O**		
3055	Code list responsible agency code	C an..3	**D**		
4435	Payment channel code	C an..3	**O**		2 = Air mail 4 = Telex 5 = S.W.I.F.T. 8 = Fedwire 9 = Personal (face-to-face) 11 = Registered mail

Segment Notes:

This segment is used to specify the method of payment and the payment channel to be used. It is recommended that this segment is only used if no previous agreements are in place between trading partners, or the ordering customer/account holder and its bank.

Example:
PAI+::26'

5. Segments Layout

Segment number: 36

SG4	- M	9999 -	LIN-DTM-RFF-BUS-FCA-SG5-SG6-SG7-SG8-SG9-SG10-SG11
SG11	- M	99999 -	SEQ-MOA-DTM-RFF-PAI-FCA-SG12-SG13-SG14-SG15-SG16
FCA	- C	1 -	Financial charges allocation

Function:

Description of allocation of charges.

		EDIFACT	GS1	*	Description
4471	Settlement means code	M an..3	**M**	*	13 = All charges borne by payee 14 = Each pay own cost 15 = All charges borne by payor When using code value '13' in this data element it is not recommended that C878 be used.
C878	CHARGE/ALLOWANCE ACCOUNT	C	**O**		
3434	Institution branch identifier	M an..17	**M**		
1131	Code list identification code	C an..17	**O**		25 = Bank identification 154 = Bank branch sorting identification
3055	Code list responsible agency code	C an..3	**D**		5 = ISO (International Organization for Standardization)
3194	Account holder identifier	C an..35	**O**		If this data element is not used the primary account (i.e. the ordering bank account) specified in the FII segment (group 6) should be used.
6345	Currency identification code	C an..3	**O**		ISO 4217 three alpha

Segment Notes:

This segment is used to identify the basis on which any charges are allocated and the account (of the ordering customer) to which the charges should be directed.
This segment must not be used if the charge allocation details have already been provided in the FCA segment in group 4.

Example:
FCA+15+DRESDEFF666:25:5'

5. Segments Layout

Segment number: 37

SG4	- M	9999 -	LIN-DTM-RFF-BUS-FCA-SG5-SG6-SG7-SG8-SG9-SG10-SG11
SG11	- M	99999 -	SEQ-MOA-DTM-RFF-PAI-FCA-SG12-SG13-SG14-SG15-SG16
SG12	- C	3 -	FII
FII	- M	1 -	Financial institution information

Function:

To identify an account and a related financial institution.

		EDIFACT	GS1	*	Description
3035	Party function code qualifier	M an..3	**M**	*	BF = Beneficiary's bank BQ = Cheque drawn bank I1 = Intermediary bank 1
C078	ACCOUNT HOLDER IDENTIFICATION	C	**D**		When payment is being made by cheque the account details for the beneficiary are not required.
3194	Account holder identifier	C an..35	**R**		Beneficiary account number.
3192	Account holder name	C an..35	**O**		
3192	Account holder name	C an..35	**O**		
6345	Currency identification code	C an..3	**O**		ISO 4217 three alpha
C088	INSTITUTION IDENTIFICATION	C	**D**		C088: In some countries it is possible to identify within the account number the institution name and branch. Where this is possible the composite C088 will not be required. For international transactions it is recommended that the need for composite C088 should be checked before sending the message.
3433	Institution name code	C an..11	**A**		
1131	Code list identification code	C an..17	**O**		25 = Bank identification
3055	Code list responsible agency code	C an..3	**D**		5 = ISO (International Organization for Standardization) If an intermediary bank (I1) is identified in this data element then the identification of the beneficiary's bank (BF) must also always be provided.
3434	Institution branch identifier	C an..17	**O**		
1131	Code list identification code	C an..17	**O**		
3055	Code list responsible agency code	C an..3	**D**		If an intermediary bank (I2) is identified in this data element then the identification of the beneficiary's bank (BF) must also always be provided.
3432	Institution name	C an..70	**O**		
3436	Institution branch location name	C an..70	**O**		
3207	Country name code	C an..3	**O**		ISO 3166 two alpha code

Segment Notes:

This segment is used to identify the financial institution and account number of the beneficiary.
The preferred way to identify a bank and its branch is in machine readable format using data elements 3433 and 3434. When using C088 it is recommended that if data element 3433 is not used that 3432 be used, and that when data element 3434 is not used that data element 3436 be used.

Example:
FII+BF+994-3277711:N GEISS'
The beneficiary is identified as being N Geiss with a bank account number of 994-3277711. In this example the identity of the bank is contained in the account number.

5. Segments Layout

Segment number: 38

SG4	- M	9999 -	LIN-DTM-RFF-BUS-FCA-SG5-SG6-SG7-SG8-SG9-SG10-SG11
SG11	- M	99999 -	SEQ-MOA-DTM-RFF-PAI-FCA-SG12-SG13-SG14-SG15-SG16
SG13	- C	3 -	NAD-CTA-COM
NAD	- M	1 -	Name and address

Function:

To specify the name/address and their related function, either by C082 only and/or unstructured by C058 or structured by C080 thru 3207.

		EDIFACT	GS1	*	Description
3035	Party function code qualifier	M an..3	**M**		BE = Beneficiary BY = Buyer CQ = Cheque order OY = Ordering customer P1 = Contact party 1 SU = Supplier The code 'OY' is only to be used to indicate situations where the ordering customer per beneficiary is different and the ordered bank (FII group 6) is the same ordered bank for all ordering customers. If the a different ordered bank is required then the B Level of the message must be repeated.
C082	PARTY IDENTIFICATION DETAILS	C	**A**		
3039	Party identifier	M an..35	**M**		For identification of parties it is recommended to use GLN - Format n13.
1131	Code list identification code	C an..17	**O**		
3055	Code list responsible agency code	C an..3	**R**	*	9 = GS1
C058	NAME AND ADDRESS	C	**O**		This composite may only be used to fulfill the requirements of directive 2003/58/EC, article 4.
3124	Name and address description	M an..35	**M**		
3124	Name and address description	C an..35	**O**		
3124	Name and address description	C an..35	**O**		
3124	Name and address description	C an..35	**O**		
3124	Name and address description	C an..35	**O**		
C080	PARTY NAME	C	**D**		
3036	Party name	M an..35	**M**		Party name in clear text.
3036	Party name	C an..35	**O**		
3036	Party name	C an..35	**O**		
3036	Party name	C an..35	**O**		
3036	Party name	C an..35	**O**		
3045	Party name format code	C an..3	**O**		
C059	STREET	C	**D**		
3042	Street and number or post office box identifier	M an..35	**M**		Building Name/Number and Street Name
3042	Street and number or post office box identifier	C an..35	**O**		
3042	Street and number or post	C an..35	**O**		

5. Segments Layout

Segment number: 38

		EDIFACT	GS1	*	Description
	office box identifier				
3042	Street and number or post office box identifier	C an..35	**O**		
3164	City name	C an..35	**D**		City/Town name, clear text
C819	COUNTRY SUB-ENTITY DETAILS	C	**D**		
3229	Country sub-entity name code	C an..9	**O**		
1131	Code list identification code	C an..17	**O**		
3055	Code list responsible agency code	C an..3	**O**		
3228	Country sub-entity name	C an..70	**O**		County/State, clear text.
3251	Postal identification code	C an..17	**D**		Postal code
3207	Country name code	C an..3	**D**		ISO 3166 two alpha code

Segment Notes:

This segment is used to identify the beneficiary of the credit instruction and is passed on unchanged through the banking chain.

Example:
NAD+CQ+++TOWER PACKAGING LTD+TOWER HOUSE:RUE HAUT:21+BRUSSELS++B1000+BE'
The cheque order party is identified in full (including address) as Tower Packaging.

NAD+BY+5412345000020::9'
The buyer is identified using the Global Location Number GLN 5412345000020.

Dependency Notes:
The following composites and data elements are only used when a coded name and address can not be used.
The affected composites and data elements are as follows;
C080 - C059 - 3164 - C819 - 3251 - 3207

5. Segments Layout

Segment number: 39

SG4	- M	9999	-	LIN-DTM-RFF-BUS-FCA-SG5-SG6-SG7-SG8-SG9-SG10-SG11
SG11	- M	99999	-	SEQ-MOA-DTM-RFF-PAI-FCA-SG12-SG13-SG14-SG15-SG16
SG13	- C	3	-	NAD-CTA-COM
CTA	- C	1	-	Contact information

Function:

To identify a person or a department to whom communication should be directed.

		EDIFACT	GS1	*	Description
3139	Contact function code	C an..3	**R**		IC = Information contact
C056	DEPARTMENT OR EMPLOYEE DETAILS	C	**O**		
3413	Department or employee name code	C an..17	**O**		
3412	Department or employee name	C an..35	**O**		

Segment Notes:

This segment is used to provide contact details relevant for the party identified in the previous NAD segment.

Example:
CTA+IC+:T. WRIGHT'

5. Segments Layout

Segment number: 40

SG4	- M	9999 -	LIN-DTM-RFF-BUS-FCA-SG5-SG6-SG7-SG8-SG9-SG10-SG11
SG11	- M	99999 -	SEQ-MOA-DTM-RFF-PAI-FCA-SG12-SG13-SG14-SG15-SG16
SG13	- C	3 -	NAD-CTA-COM
COM	- C	5 -	Communication contact

Function:

To identify a communication number of a department or a person to whom communication should be directed.

		EDIFACT	GS1	*	Description
C076	COMMUNICATION CONTACT	M	**M**		
3148	Communication address identifier	M an..512	**M**		
3155	Communication address code qualifier	M an..3	**M**	*	CA = Cable address EI = EDI EM = Electronic mail FX = Fax TE = Telephone TL = Telex

Segment Notes:

This segment is used to provide communications details relevant to the contact identified in the CTA segment.

Example:
COM+003212187674:FX'

5. Segments Layout

Segment number: 41

SG4	- M	9999 -	LIN-DTM-RFF-BUS-FCA-SG5-SG6-SG7-SG8-SG9-SG10-SG11
SG11	- M	99999 -	SEQ-MOA-DTM-RFF-PAI-FCA-SG12-SG13-SG14-SG15-SG16
SG14	- C	3 -	INP-FTX-DTM
INP	- M	1 -	Parties and instruction

Function:

To specify parties to an instruction, the instruction, or both.

		EDIFACT	GS1	*	Description
C849	PARTIES TO INSTRUCTION	C	**A**		
3301	Enacting party identifier	M an..35	**M**		3 = Beneficiary's bank YC7 = Ordered bank (SWIFT Code)
3285	Instruction receiving party identifier	C an..35	**O**		4 = Beneficiary 5 = Contact party 1 YC5 = Ordered bank (SWIFT Code)
C522	INSTRUCTION	C	**O**		
4403	Instruction type code qualifier	M an..3	**M**		1 = Action required
4401	Instruction description code	C an..3	**O**		AD = Advise AP = Advise by phone AJ = Advise by fax (SWIFT Code) EX = Expedite
1131	Code list identification code	C an..17	**O**		
3055	Code list responsible agency code	C an..3	**D**		
4400	Instruction description	C an..35	**N**		
C850	STATUS OF INSTRUCTION	C	**N**		
4405	Status description code	M an..3			
3036	Party name	C an..35			
1229	Action request/notification description code	C an..3	**N**		

Segment Notes:

This segment is used to identify the party who must carry out an instruction from the ordering customer, and the party to whom the instruction is intended.
This segment should not be used if the INP segment in segment group 8 was used.
DE's 3301 and 3285: As these data elements are being used to provide coded information it is recommended that their format and length be restricted to an..3.

Example:
INP+3:4+1:AP'

5. Segments Layout

Segment number: 42

SG4	- M	9999 -	LIN-DTM-RFF-BUS-FCA-SG5-SG6-SG7-SG8-SG9-SG10-SG11
SG11	- M	99999 -	SEQ-MOA-DTM-RFF-PAI-FCA-SG12-SG13-SG14-SG15-SG16
SG14	- C	3 -	INP-FTX-DTM
FTX	- C	1 -	Free text

Function:

To provide free form or coded text information.

		EDIFACT	GS1	*	Description
4451	Text subject code qualifier	M an..3	**M**		AAG = Party instructions
4453	Free text function code	C an..3	**N**		
C107	TEXT REFERENCE	C	**D**		This composite is only used when trading partners have agreed to use mutually defined code values.
4441	Free text value code	M an..17	**M**		Coded reference to standard text between partners.
1131	Code list identification code	C an..17	**O**		
3055	Code list responsible agency code	C an..3	**D**		86 = Assigned by party originating the message
C108	TEXT LITERAL	C	**D**		This composite is only used if coded text can not be used.
4440	Free text value	M an..512	**M**		
4440	Free text value	C an..512	**O**		
4440	Free text value	C an..512	**O**		
4440	Free text value	C an..512	**O**		
4440	Free text value	C an..512	**O**		
3453	Language name code	C an..3	**D**		ISO 639 two alpha code. This data element is only used when non coded free text has been provided in data element C108.
4447	Free text format code	C an..3	**N**		

Segment Notes:

This segment is used to provide additional coded or free text instructions to those provided in the INP segment. Use of this segment in free form is not recommended since in most cases it inhibits automatic processing of the multiple payment order. Coded references to standard texts is an available functionality which enables automatic processing and reduces transmission and processing overheads. Standard texts should be mutually defined among trading partners and can be used to cover legal and other requirements.

Example:
FTX+AAG+++IF INSUFFICIENT FUNDS IN NUMBER 1 ACCOUNT USE NUMBER 2'

5. Segments Layout

Segment number: 43

SG4	- M	9999	-	LIN-DTM-RFF-BUS-FCA-SG5-SG6-SG7-SG8-SG9-SG10-SG11
SG11	- M	99999	-	SEQ-MOA-DTM-RFF-PAI-FCA-SG12-SG13-SG14-SG15-SG16
SG14	- C	3	-	INP-FTX-DTM
DTM	- C	2	-	Date/time/period

Function:

To specify date, and/or time, or period.

		EDIFACT	GS1	*	Description
C507	DATE/TIME/PERIOD	M	**M**		
2005	Date or time or period function code qualifier	M an..3	**M**		174 = Advise after date/time 175 = Advise before date/time 177 = Advise on date/time 273 = Validity period
2380	Date or time or period value	C an..35	**R**		
2379	Date or time or period format code	C an..3	**R**		102 = CCYYMMDD 718 = CCYYMMDD-CCYYMMDD

Segment Notes:

This segment is used to specify the earliest and latest dates by which the instructions must be carried out.

Example:
DTM+175:200206171000:203'
Advise before 10am on the 17th of June 2002.

5. Segments Layout

Segment number: 44

SG4	- M	9999	-	LIN-DTM-RFF-BUS-FCA-SG5-SG6-SG7-SG8-SG9-SG10-SG11
SG11	- M	99999	-	SEQ-MOA-DTM-RFF-PAI-FCA-SG12-SG13-SG14-SG15-SG16
SG15	- C	10	-	GIS-MOA-LOC-NAD-RCS-FTX
GIS	- M	1	-	General indicator

Function:

To transmit a processing indicator.

Notes:
1. This segment will be removed effective with directory D.02B.

		EDIFACT	GS1	*	Description
C529	PROCESSING INDICATOR	M	**M**		
7365	Processing indicator description code	M an..3	**M**	*	10 = Declaration requested
1131	Code list identification code	C an..17	**N**		
3055	Code list responsible agency code	C an..3	**N**		
7187	Process type description code	C an..17	**N**		

Segment Notes:

This segment is used to indicate that the information contained in the following segments will be passed on to and processed by the central and regulatory party identified in the NAD segment.
This segment should not be used if the GIS segment in segment group 9 has already been used.
Note: The use of this segment group is subject to domestic regulations stipulated by regulatory authorities, e.g. Central Bank.

Example:
GIS+10'

5. Segments Layout

Segment number: 45

SG4	- M	9999	-	LIN-DTM-RFF-BUS-FCA-SG5-SG6-SG7-SG8-SG9-SG10-SG11
SG11	- M	99999	-	SEQ-MOA-DTM-RFF-PAI-FCA-SG12-SG13-SG14-SG15-SG16
SG15	- C	10	-	GIS-MOA-LOC-NAD-RCS-FTX
MOA	- C	1	-	Monetary amount

Function:

To specify a monetary amount.

		EDIFACT	GS1	*	Description
C516	MONETARY AMOUNT	M	**M**		
5025	Monetary amount type code qualifier	M an..3	**M**		9 = Amount due/amount payable
5004	Monetary amount	C n..35	**R**		
6345	Currency identification code	C an..3	**O**		ISO 4217 three alpha code
6343	Currency type code qualifier	C an..3	**O**		11 = Payment currency
4405	Status description code	C an..3	**N**		

Segment Notes:

This segment is used to specify monetary amounts which must be reported to the regulatory party identified in the NAD segment.

Example:
MOA+9:125000:EUR:11'

5. Segments Layout

Segment number: 46

SG4	- M	9999 -	LIN-DTM-RFF-BUS-FCA-SG5-SG6-SG7-SG8-SG9-SG10-SG11
SG11	- M	99999 -	SEQ-MOA-DTM-RFF-PAI-FCA-SG12-SG13-SG14-SG15-SG16
SG15	- C	10 -	GIS-MOA-LOC-NAD-RCS-FTX
LOC	- C	2 -	Place/location identification

Function:

To identify a place or a location and/or related locations.

		EDIFACT	GS1	*	Description
3227	Location function code qualifier	M an..3	**M**		27 = Country of origin 28 = Country of destination of goods 39 = Country of production 40 = Country of trading
C517	LOCATION IDENTIFICATION	C	**A**		
3225	Location name code	C an..25	**A**		For country identification see ISO 3166 two alpha code, DE 3207.
1131	Code list identification code	C an..17	**O**		
3055	Code list responsible agency code	C an..3	**D**		5 = ISO (International Organization for Standardization) 9 = GS1 DE 3055 must be used if DE 3225 is used and does not contain an UN/LOCODE.
3224	Location name	C an..256	**O**		
C519	RELATED LOCATION ONE IDENTIFICATION	C	**N**		
3223	First related location name code	C an..25			
1131	Code list identification code	C an..17			
3055	Code list responsible agency code	C an..3			
3222	First related location name	C an..70			
C553	RELATED LOCATION TWO IDENTIFICATION	C	**N**		
3233	Second related location name code	C an..25			
1131	Code list identification code	C an..17			
3055	Code list responsible agency code	C an..3			
3232	Second related location name	C an..70			
5479	Relation code	C an..3	**N**		

Segment Notes:

This segment is used to indicate any locations relevant to the regulatory party identified in the NAD segment.

Example:
LOC+39+BE::5'
Goods were produced in Belgium.

5. Segments Layout

Segment number: 47

SG4	- M	9999 -	LIN-DTM-RFF-BUS-FCA-SG5-SG6-SG7-SG8-SG9-SG10-SG11
SG11	- M	99999 -	SEQ-MOA-DTM-RFF-PAI-FCA-SG12-SG13-SG14-SG15-SG16
SG15	- C	10 -	GIS-MOA-LOC-NAD-RCS-FTX
NAD	- C	1 -	Name and address

Function:

To specify the name/address and their related function, either by C082 only and/or unstructured by C058 or structured by C080 thru 3207.

		EDIFACT	GS1	*	Description
3035	Party function code qualifier	M an..3	**M**	*	RA = Central bank or regulatory authority
C082	PARTY IDENTIFICATION DETAILS	C	**A**		
3039	Party identifier	M an..35	**M**		For identification of parties it is recommended to use GLN - Format n13.
1131	Code list identification code	C an..17	**O**		
3055	Code list responsible agency code	C an..3	**R**	*	9 = GS1
C058	NAME AND ADDRESS	C	**O**		This composite may only be used to fulfill the requirements of directive 2003/58/EC, article 4.
3124	Name and address description	M an..35	**M**		
3124	Name and address description	C an..35	**O**		
3124	Name and address description	C an..35	**O**		
3124	Name and address description	C an..35	**O**		
3124	Name and address description	C an..35	**O**		
C080	PARTY NAME	C	**D**		
3036	Party name	M an..35	**M**		Party name in clear text.
3036	Party name	C an..35	**O**		
3036	Party name	C an..35	**O**		
3036	Party name	C an..35	**O**		
3036	Party name	C an..35	**O**		
3045	Party name format code	C an..3	**O**		
C059	STREET	C	**D**		
3042	Street and number or post office box identifier	M an..35	**M**		Building Name/Number and Street
3042	Street and number or post office box identifier	C an..35	**O**		Name and/or P.O. Box.
3042	Street and number or post office box identifier	C an..35	**O**		
3042	Street and number or post office box identifier	C an..35	**O**		
3164	City name	C an..35	**D**		City/town name, clear text.
C819	COUNTRY SUB-ENTITY DETAILS	C	**D**		
3229	Country sub-entity name code	C an..9	**O**		
1131	Code list identification code	C an..17	**O**		

5. Segments Layout

Segment number: 47

		EDIFACT	GS1	*	Description
3055	Code list responsible agency code	C an..3	**O**		
3228	Country sub-entity name	C an..70	**O**		County/State, clear text.
3251	Postal identification code	C an..17	**D**		Postal code.
3207	Country name code	C an..3	**D**		ISO 3166 two alpha code

Segment Notes:

This segment is used to identify the central and regulatory authority specifying the regulatory information detailed in the GIS and FTX segments.

Example:
NAD+RA+5422331123459::9'

Dependency Notes:
The following composites and data elements are only used when a coded name and address can not be used.
The affected composites and data elements are as follows;
C080 - C059 - 3164 - C819 - 3251 - 3207

5. Segments Layout

Segment number: 48

SG4	- M	9999	-	LIN-DTM-RFF-BUS-FCA-SG5-SG6-SG7-SG8-SG9-SG10-SG11
SG11	- M	99999	-	SEQ-MOA-DTM-RFF-PAI-FCA-SG12-SG13-SG14-SG15-SG16
SG15	- C	10	-	GIS-MOA-LOC-NAD-RCS-FTX
RCS	- C	1	-	Requirements and conditions

Function:

To specify sector/subject requirements and conditions.

		EDIFACT	GS1	*	Description
7293	Sector area identification code qualifier	M an..3	**M**	*	25 = Banking sector
C550	REQUIREMENT/CONDITION IDENTIFICATION	C	**A**		
7295	Requirement or condition description identifier	M an..17	**M**		As no EDIFACT code values exist for this data element it is recommended that nationally agreed codes be formulated to identify the requirements and conditions possible due to regulatory requirements.
1131	Code list identification code	C an..17	**O**		
3055	Code list responsible agency code	C an..3	**D**		86 = Assigned by party originating the message
7294	Requirement or condition description	C an..35	**O**		
1229	Action request/notification description code	C an..3	**N**		
3207	Country name code	C an..3	**N**		

Segment Notes:

This segment is used to indicate any requirements and conditions related to the transaction which is being reported to the regulatory authorities.

Example:
RCS+25+AB1::86'
Code assigned by the message sender indicating that the requirements and conditions relate to regulatory requirements to report the payment of amount in excess of a certain amount.

5. Segments Layout

Segment number: 49

SG4	- M	9999 -	LIN-DTM-RFF-BUS-FCA-SG5-SG6-SG7-SG8-SG9-SG10-SG11
SG11	- M	99999 -	SEQ-MOA-DTM-RFF-PAI-FCA-SG12-SG13-SG14-SG15-SG16
SG15	- C	10 -	GIS-MOA-LOC-NAD-RCS-FTX
FTX	- C	10 -	Free text

Function:

To provide free form or coded text information.

		EDIFACT	GS1	*	Description
4451	Text subject code qualifier	M an..3	**M**	*	REG = Regulatory information
4453	Free text function code	C an..3	**N**		
C107	TEXT REFERENCE	C	**D**		This composite is only used when trading partners have agreed to use mutually defined code values.
4441	Free text value code	M an..17	**M**		A code identifying standard text agreed between partners.
1131	Code list identification code	C an..17	**O**		
3055	Code list responsible agency code	C an..3	**D**		
C108	TEXT LITERAL	C	**D**		This composite is only used if coded text can not be used.
4440	Free text value	M an..512	**M**		
4440	Free text value	C an..512	**O**		
4440	Free text value	C an..512	**O**		
4440	Free text value	C an..512	**O**		
4440	Free text value	C an..512	**O**		
3453	Language name code	C an..3	**D**		ISO 639 two alpha code. This data element is only used when non coded free text has been provided in data element C108.
4447	Free text format code	C an..3	**N**		

Segment Notes:

This segment is used to provide free or coded text information required by the regulatory authorities. The form and content of this segment is dependent upon the central bank or regulatory authority's requirements.
Use of this segment in free form is not recommended since in most cases it inhibits automatic processing of the multiple payment order. Coded references to standard texts is an available functionality which enables automatic processing and reduces transmission and processing overheads. Standard texts should be mutually defined among trading partners and can be used to cover legal and other requirements.

Example:
FTX+REG+++SUBJECT TO EUROPEAN CENTRAL BANK REGULATIONS'

5. Segments Layout

Segment number: 50

SG4	- M	9999	-	LIN-DTM-RFF-BUS-FCA-SG5-SG6-SG7-SG8-SG9-SG10-SG11
SG11	- M	99999	-	SEQ-MOA-DTM-RFF-PAI-FCA-SG12-SG13-SG14-SG15-SG16
SG16	- C	1	-	PRC-FTX-SG17-SG23
PRC	- M	1	-	Process identification

Function:

To identify a process.

		EDIFACT	GS1	*	Description
C242	PROCESS TYPE AND DESCRIPTION	C	**R**		
7187	Process type description code	M an..17	**M**	*	8 = Processing of structured information 9 = Processing of identical information in structured and unstructured form 10 = Processing of different information in structured and unstructured form 11 = Processing of unstructured information 8 - The information following this segment is presented in a structured format using segments such as the DOC and MOA in segment group 17. 9 - The information following this segment is presented in both an unstructured format, and has the same content and meaning, using the following FTX segment, and a structured format using segments such as the DOC and MOA in segment group 17. This code is required so as the receiving bank can decide which format (EDIFACT or SWIFT) to use when transmitting the information to the beneficiary's bank. 10 - The information following this segment is presented in both an unstructured format, using the following FTX segment, and in a structured format using segments such as the DOC and MOA in segment group 17. The information presented in the structured and unstructured format is not identical. This code is required to allow the receiving bank to decide which format to use when transmitting the information to the beneficiary's bank while understanding the risks of possible losses due to the difference in data content. 11 - The information following this segment is presented in an unstructured format using the following FTX segment.
1131	Code list identification code	C an..17	**O**		
3055	Code list responsible agency code	C an..3	**O**		
7186	Process type description	C an..35	**O**		
7186	Process type description	C an..35	**O**		
C830	PROCESS IDENTIFICATION DETAILS	C	**N**		
7191	Process description code	C an..17			
1131	Code list identification code	C an..17			
3055	Code list responsible agency code	C an..3			

5. Segments Layout

Segment number: 50

	EDIFACT	GS1	*	Description
7190 Process description	C an..70			

Segment Notes:

This segment is used to provide processing information related to the credit instruction.
It should be noted that information sent in groups 16 through 23 is generated by the ordering party and is simply forwarded to the beneficiary via the intermediary bank(s) without amendment.

Example:
PRC+8'

5. Segments Layout

Segment number: 51

SG4	- M	9999 -	LIN-DTM-RFF-BUS-FCA-SG5-SG6-SG7-SG8-SG9-SG10-SG11
SG11	- M	99999 -	SEQ-MOA-DTM-RFF-PAI-FCA-SG12-SG13-SG14-SG15-SG16
SG16	- C	1 -	PRC-FTX-SG17-SG23
FTX	- C	5 -	Free text

Function:

To provide free form or coded text information.

		EDIFACT	GS1	*	Description
4451	Text subject code qualifier	M an..3	**M**		PMD = Payment detail/remittance information
4453	Free text function code	C an..3	**N**		
C107	TEXT REFERENCE	C	**D**		This composite is only used when trading partners have agreed to use mutually defined code values.
4441	Free text value code	M an..17	**M**		A code identifying standard text agreed between trading partners.
1131	Code list identification code	C an..17	**O**		
3055	Code list responsible agency code	C an..3	**D**		
C108	TEXT LITERAL	C	**D**		This composite is only used if coded text can not be used.
4440	Free text value	M an..512	**M**		
4440	Free text value	C an..512	**O**		
4440	Free text value	C an..512	**O**		
4440	Free text value	C an..512	**O**		
4440	Free text value	C an..512	**O**		
3453	Language name code	C an..3	**D**		ISO 639 two alpha code. This data element is only used when non coded free text has been provided in data element C108.
4447	Free text format code	C an..3	**N**		

Segment Notes:

This segment is used to provide free or coded text information related to the processing of the payment.
Use of this segment in free form is not recommended since in most cases it inhibits automatic processing of the multiple payment order. Coded references to standard texts is an available functionality which enables automatic processing and reduces transmission and processing overheads. Standard texts should be mutually defined among trading partners and can be used to cover legal and other requirements.

Example:
FTX+PMD+++PAYMENT RELATES TO ACCUMULATED INVOICES JAN 1995'

5. Segments Layout

Segment number: 52

SG4	- M	9999 -	LIN-DTM-RFF-BUS-FCA-SG5-SG6-SG7-SG8-SG9-SG10-SG11
SG11	- M	99999 -	SEQ-MOA-DTM-RFF-PAI-FCA-SG12-SG13-SG14-SG15-SG16
SG16	- C	1 -	PRC-FTX-SG17-SG23
SG17	- C	9999 -	DOC-MOA-DTM-RFF-NAD-SG18-SG19-SG20
DOC	- M	1 -	Document/message details

Function:

To identify documents and details directly related to it.

		EDIFACT	GS1	*	Description
C002	DOCUMENT/MESSAGE NAME	M	**M**		
1001	Document name code	C an..3	**R**		82 = Metered services invoice 83 = Credit note related to financial adjustments 84 = Debit note related to financial adjustments 380 = Commercial invoice 381 = Credit note - goods and services 383 = Debit note - goods and services 385 = Consolidated invoice 386 = Prepayment invoice 389 = Self-billed invoice 390 = Delcredere invoice
1131	Code list identification code	C an..17	**N**		
3055	Code list responsible agency code	C an..3	**D**	*	9 = GS1 This data element is only used if the GS1 code values are used in data element 1001.
1000	Document name	C an..35	**O**		
C503	DOCUMENT/MESSAGE DETAILS	C	**R**		
1004	Document identifier	C an..35	**R**		
1373	Document status code	C an..3	**O**		2 = Accompanying goods 4 = To arrive by separate EDI message 6 = To arrive by manual means
1366	Document source description	C an..70	**N**		
3453	Language name code	C an..3	**O**		ISO 639 two alpha code.
1056	Version identifier	C an..9	**N**		
1060	Revision identifier	C an..6	**N**		
3153	Communication medium type code	C an..3	**N**		
1220	Document copies required quantity	C n..2	**N**		
1218	Document originals required quantity	C n..2	**N**		

5. Segments Layout

Segment Notes:

This segment is used to provide details of the documents, e.g. a group of invoices, to which the multiple payment order refers.
This information is generated by the party making the payment and must be included at least once in the Multiple Payment Order message. Individual document line item information is provided in the DLI segment.

5. Segments Layout

Segment number: 52

Example: DOC+380+43534'

5. Segments Layout

Segment number: 53

SG4	- M	9999 -	LIN-DTM-RFF-BUS-FCA-SG5-SG6-SG7-SG8-SG9-SG10-SG11
SG11	- M	99999 -	SEQ-MOA-DTM-RFF-PAI-FCA-SG12-SG13-SG14-SG15-SG16
SG16	- C	1 -	PRC-FTX-SG17-SG23
SG17	- C	9999 -	DOC-MOA-DTM-RFF-NAD-SG18-SG19-SG20
MOA	- C	5 -	Monetary amount

Function:

To specify a monetary amount.

		EDIFACT	GS1	*	Description
C516	MONETARY AMOUNT	M	**M**		
5025	Monetary amount type code qualifier	M an..3	**M**		11 = Amount paid 12 = Amount remitted 39 = Invoice total amount 52 = Discount amount 53 = Discount amount due 109 = Payment discount amount 126 = To collect 128 = Total amount 139 = Total payment amount 143 = Transfer amount When used in conjunction with code 481 in data element 1001 of the DOC segment only the amount remitted (code 12) should be used here. When used with all other codes in data element 1001 in the DOC segment it is recommended that the invoice total amount (code 39) and the amount remitted (code 12) be included in this data element.
5004	Monetary amount	C n..35	**R**		
6345	Currency identification code	C an..3	**N**		
6343	Currency type code qualifier	C an..3	**N**		
4405	Status description code	C an..3	**N**		

Segment Notes:

This segment is used to specify monetary amounts related to the complete document identified in the previous DOC segment.

Example:
MOA+12:15677'

5. Segments Layout

Segment number: 54

SG4	- M	9999	-	LIN-DTM-RFF-BUS-FCA-SG5-SG6-SG7-SG8-SG9-SG10-SG11
SG11	- M	99999	-	SEQ-MOA-DTM-RFF-PAI-FCA-SG12-SG13-SG14-SG15-SG16
SG16	- C	1	-	PRC-FTX-SG17-SG23
SG17	- C	9999	-	DOC-MOA-DTM-RFF-NAD-SG18-SG19-SG20
DTM	- C	5	-	Date/time/period

Function:

To specify date, and/or time, or period.

		EDIFACT	GS1	*	Description
C507	DATE/TIME/PERIOD	M	**M**		
2005	Date or time or period function code qualifier	M an..3	**M**	*	137 = Document/message date/time 138 = Payment date 171 = Reference date/time 227 = Beneficiary's banks due date 265 = Due date
2380	Date or time or period value	C an..35	**R**		
2379	Date or time or period format code	C an..3	**R**		102 = CCYYMMDD 203 = CCYYMMDDHHMM

Segment Notes:

This segment is used to specify dates related to the document identified in the DOC segment.

Example:
DTM+137:20020510:102'

5. Segments Layout

Segment number: 55

SG4	- M	9999 -	LIN-DTM-RFF-BUS-FCA-SG5-SG6-SG7-SG8-SG9-SG10-SG11
SG11	- M	99999 -	SEQ-MOA-DTM-RFF-PAI-FCA-SG12-SG13-SG14-SG15-SG16
SG16	- C	1 -	PRC-FTX-SG17-SG23
SG17	- C	9999 -	DOC-MOA-DTM-RFF-NAD-SG18-SG19-SG20
RFF	- C	5 -	Reference

Function:

To specify a reference.

		EDIFACT	GS1	*	Description
C506	REFERENCE	M	**M**		
1153	Reference code qualifier	M an..3	**M**		AAB = Proforma invoice number AAJ = Delivery order number AAK = Despatch advice number CD = Credit note number CR = Customer reference number CT = Contract number DL = Debit note number DQ = Delivery note number IV = Invoice number ON = Order number (buyer) PL = Price list number POR = Purchase order response number PP = Purchase order change number VN = Order number (supplier)
1154	Reference identifier	C an..70	**R**		
1156	Document line identifier	C an..6	**N**		
4000	Reference version identifier	C an..35	**N**		
1060	Revision identifier	C an..6	**N**		

Segment Notes:

This segment is used to provide any additional references relevant to the currently identified DOC segment.

Example:
RFF+ON:A-7664'

5. Segments Layout

Segment number: 56

SG4	- M	9999 -	LIN-DTM-RFF-BUS-FCA-SG5-SG6-SG7-SG8-SG9-SG10-SG11
SG11	- M	99999 -	SEQ-MOA-DTM-RFF-PAI-FCA-SG12-SG13-SG14-SG15-SG16
SG16	- C	1 -	PRC-FTX-SG17-SG23
SG17	- C	9999 -	DOC-MOA-DTM-RFF-NAD-SG18-SG19-SG20
NAD	- C	2 -	Name and address

Function:

To specify the name/address and their related function, either by C082 only and/or unstructured by C058 or structured by C080 thru 3207.

		EDIFACT	GS1	*	Description
3035	Party function code qualifier	M an..3	**M**		BY = Buyer DP = Delivery party II = Issuer of invoice IV = Invoicee SU = Supplier UD = Ultimate customer
C082	PARTY IDENTIFICATION DETAILS	C	**A**		
3039	Party identifier	M an..35	**M**		For identification of parties it is recommended to use GLN - Format n13.
1131	Code list identification code	C an..17	**O**		
3055	Code list responsible agency code	C an..3	**R**	*	9 = GS1
C058	NAME AND ADDRESS	C	**O**		This composite may only be used to fulfill the requirements of directive 2003/58/EC, article 4.
3124	Name and address description	M an..35	**M**		
3124	Name and address description	C an..35	**O**		
3124	Name and address description	C an..35	**O**		
3124	Name and address description	C an..35	**O**		
3124	Name and address description	C an..35	**O**		
C080	PARTY NAME	C	**D**		
3036	Party name	M an..35	**M**		Party name in clear text.
3036	Party name	C an..35	**O**		
3036	Party name	C an..35	**O**		
3036	Party name	C an..35	**O**		
3036	Party name	C an..35	**O**		
3045	Party name format code	C an..3	**O**		
C059	STREET	C	**D**		
3042	Street and number or post office box identifier	M an..35	**M**		Building name/number and street name.
3042	Street and number or post office box identifier	C an..35	**O**		
3042	Street and number or post office box identifier	C an..35	**O**		
3042	Street and number or post office box identifier	C an..35	**O**		

5. Segments Layout

Segment number: 56

		EDIFACT	GS1	*	Description
3164	City name	C an..35	**D**		City/town name, clear text.
C819	COUNTRY SUB-ENTITY DETAILS	C	**D**		
3229	Country sub-entity name code	C an..9	**O**		
1131	Code list identification code	C an..17	**O**		
3055	Code list responsible agency code	C an..3	**O**		
3228	Country sub-entity name	C an..70	**O**		County/State, clear text.
3251	Postal identification code	C an..17	**D**		Postal code
3207	Country name code	C an..3	**D**		ISO 3166 two alpha code

Segment Notes:

This segment is used to identify any additional parties related to the currently identified document, e.g. delivery party.

Example:
NAD+DP+507161511110::9'

Dependency Notes:
The following composites and data elements are only used when a coded name and address can not be used.
The affected composites and data elements are as follows;
C080 - C059 - 3164 - C819 - 3251 - 3207

5. Segments Layout

Segment number: 57

SG4	- M	9999 -	LIN-DTM-RFF-BUS-FCA-SG5-SG6-SG7-SG8-SG9-SG10-SG11
SG11	- M	99999 -	SEQ-MOA-DTM-RFF-PAI-FCA-SG12-SG13-SG14-SG15-SG16
SG16	- C	1 -	PRC-FTX-SG17-SG23
SG17	- C	9999 -	DOC-MOA-DTM-RFF-NAD-SG18-SG19-SG20
SG18	- C	5 -	CUX-DTM
CUX	- M	1 -	Currencies

Function:

To specify currencies used in the transaction and relevant details for the rate of exchange.

		EDIFACT	GS1	*	Description
C504	CURRENCY DETAILS	C	**R**		
6347	Currency usage code qualifier	M an..3	**M**	*	2 = Reference currency
6345	Currency identification code	C an..3	**R**		ISO 4217 three alpha
6343	Currency type code qualifier	C an..3	**R**	*	11 = Payment currency
6348	Currency rate value	C n..4	**N**		
C504	CURRENCY DETAILS	C	**D**		The second occurrence of this composite is only used if a target currency is being specified.
6347	Currency usage code qualifier	M an..3	**M**	*	3 = Target currency
6345	Currency identification code	C an..3	**R**		ISO 4217 three alpha
6343	Currency type code qualifier	C an..3	**R**		4 = Invoicing currency
6348	Currency rate value	C n..4	**N**		
5402	Currency exchange rate	C n..12	**D**		The rate of exchange is only used if a target currency has been identified in the second occurrence of C504.
6341	Exchange rate currency market identifier	C an..3	**N**		

Segment Notes:

This segment is used to provide currency rate of exchange information used to convert amounts specified in the MOA segment for the referenced document, to an amount expressed in terms of the remittance/payment currency. This CUX segment will only be used when the currency of its rate of exchange is different from the default global currency or its rate of exchange specified in the CUX segment at heading level.
When specifying the Reference and Target currencies for international trade, one occurrence of CUX is all that is required. The reference currency is identified in the first occurrence of composite C504, with the target currency specified in the second occurrence of C504. The rate of exchange between the two is detailed in DE 5402.
The general rule for calculating the rate of exchange is as follows;
Reference Currency multiplied by Rate = Target Currency.

Example:
CUX+2:EUR:11+3:USD:4+51.25'

5. Segments Layout

Segment number: 58

SG4	- M	9999	-	LIN-DTM-RFF-BUS-FCA-SG5-SG6-SG7-SG8-SG9-SG10-SG11
SG11	- M	99999	-	SEQ-MOA-DTM-RFF-PAI-FCA-SG12-SG13-SG14-SG15-SG16
SG16	- C	1	-	PRC-FTX-SG17-SG23
SG17	- C	9999	-	DOC-MOA-DTM-RFF-NAD-SG18-SG19-SG20
SG18	- C	5	-	CUX-DTM
DTM	- C	1	-	Date/time/period

Function:

To specify date, and/or time, or period.

		EDIFACT	GS1	*	Description
C507	DATE/TIME/PERIOD	M	**M**		
2005	Date or time or period function code qualifier	M an..3	**M**	*	134 = Rate of exchange date/time 273 = Validity period
2380	Date or time or period value	C an..35	**R**		
2379	Date or time or period format code	C an..3	**R**		102 = CCYYMMDD 718 = CCYYMMDD-CCYYMMDD

Segment Notes:

This segment is used to specify any dates related to the currency information specified in the previous CUX segment.

Example:
DTM+134:19950401:102'

5. Segments Layout

Segment number: 59

SG4	- M	9999 -	LIN-DTM-RFF-BUS-FCA-SG5-SG6-SG7-SG8-SG9-SG10-SG11
SG11	- M	99999 -	SEQ-MOA-DTM-RFF-PAI-FCA-SG12-SG13-SG14-SG15-SG16
SG16	- C	1 -	PRC-FTX-SG17-SG23
SG17	- C	9999 -	DOC-MOA-DTM-RFF-NAD-SG18-SG19-SG20
SG19	- C	100 -	AJT-MOA-RFF
AJT	- M	1 -	Adjustment details

Function:

To identify the reason for an adjustment.

		EDIFACT	GS1	*	Description
4465	Adjustment reason description code	M an..3	**M**		1 = Agreed settlement 2 = Below specification goods 3 = Damaged goods 4 = Short delivery 5 = Price query 6 = Proof of delivery required 9 = Invoice error 14 = Wrong delivery 17 = Transport damage 20 = Discount for late delivery 32 = Goods not delivered 38 = Deducted bonus 52 = Wrong invoice 67 = Delcredere costs 68 = Early payment allowance adjustment 21 = Advertising costs If adjustments are made due to national tax practices then code values to identify these national practices may be allocated for use with this data element by individual Numbering Organisations.
1082	Line item identifier	C an..6	**N**		

Segment Notes:

This segment is used to indicate the reason for an adjustment to the current document.
Adjustments can be given for the whole referenced document identified in the DOC segment and additionally, can also be given per line item in the following DLI segment group.

Example:
AJT+4'

5. Segments Layout

Segment number: 60

SG4	- M	9999	-	LIN-DTM-RFF-BUS-FCA-SG5-SG6-SG7-SG8-SG9-SG10-SG11
SG11	- M	99999	-	SEQ-MOA-DTM-RFF-PAI-FCA-SG12-SG13-SG14-SG15-SG16
SG16	- C	1	-	PRC-FTX-SG17-SG23
SG17	- C	9999	-	DOC-MOA-DTM-RFF-NAD-SG18-SG19-SG20
SG19	- C	100	-	AJT-MOA-RFF
MOA	- M	1	-	Monetary amount

Function:

To specify a monetary amount.

		EDIFACT	GS1	*	Description
C516	MONETARY AMOUNT	M	**M**		
5025	Monetary amount type code qualifier	M an..3	**M**	*	5 = Adjusted amount 165 = Adjustment amount
5004	Monetary amount	C n..35	**R**		
6345	Currency identification code	C an..3	**N**		
6343	Currency type code qualifier	C an..3	**N**		
4405	Status description code	C an..3	**N**		

Segment Notes:

This segment is used to indicate the value of the adjusted amount for the current document.
Adjustment amounts may be given for information purposes only, i.e. not for calculation. The adjustment amount will not necessarily equal the difference between the amount due and the amount remitted.

Example:
MOA+5:8700'

5. Segments Layout

Segment number: 61

SG4	- M	9999 -	LIN-DTM-RFF-BUS-FCA-SG5-SG6-SG7-SG8-SG9-SG10-SG11
SG11	- M	99999 -	SEQ-MOA-DTM-RFF-PAI-FCA-SG12-SG13-SG14-SG15-SG16
SG16	- C	1 -	PRC-FTX-SG17-SG23
SG17	- C	9999 -	DOC-MOA-DTM-RFF-NAD-SG18-SG19-SG20
SG19	- C	100 -	AJT-MOA-RFF
RFF	- C	1 -	Reference

Function:

To specify a reference.

		EDIFACT	GS1	*	Description
C506	REFERENCE	M	**M**		
1153	Reference code qualifier	M an..3	**M**		AAK = Despatch advice number ON = Order number (buyer) PL = Price list number PP = Purchase order change number POR = Purchase order response number VN = Order number (supplier)
1154	Reference identifier	C an..70	**R**		
1156	Document line identifier	C an..6	**N**		
4000	Reference version identifier	C an..35	**N**		
1060	Revision identifier	C an..6	**N**		

Segment Notes:

This segment is used to specify any references associated with the adjusted amounts.
If specific references or information related to a line item number in a document are required then this information is provided in the AJT segment group (group 11) at DLI level.

Example:
RFF+PL:JAN-1995'

5. Segments Layout

Segment number: 62

SG4	- M	9999	-	LIN-DTM-RFF-BUS-FCA-SG5-SG6-SG7-SG8-SG9-SG10-SG11
SG11	- M	99999	-	SEQ-MOA-DTM-RFF-PAI-FCA-SG12-SG13-SG14-SG15-SG16
SG16	- C	1	-	PRC-FTX-SG17-SG23
SG17	- C	9999	-	DOC-MOA-DTM-RFF-NAD-SG18-SG19-SG20
SG20	- C	1000	-	DLI-MOA-PIA-SG22
DLI	- M	1	-	Document line identification

Function:

To specify the processing mode of a specific line within a referenced document.

		EDIFACT	GS1	*	Description
1073	Document line action code	M an..3	**M**		1 = Included in document/transaction 2 = Excluded from document/transaction
1082	Line item identifier	M an..6	**M**		

Segment Notes:

This segment is used to identify individual line items within the document identified in the DOC segment.

Example:
DLI+2+55'

5. Segments Layout

Segment number: 63

SG4	- M	9999 -	LIN-DTM-RFF-BUS-FCA-SG5-SG6-SG7-SG8-SG9-SG10-SG11
SG11	- M	99999 -	SEQ-MOA-DTM-RFF-PAI-FCA-SG12-SG13-SG14-SG15-SG16
SG16	- C	1 -	PRC-FTX-SG17-SG23
SG17	- C	9999 -	DOC-MOA-DTM-RFF-NAD-SG18-SG19-SG20
SG20	- C	1000 -	DLI-MOA-PIA-SG22
MOA	- M	5 -	Monetary amount

Function:

To specify a monetary amount.

		EDIFACT	GS1	*	Description
C516	MONETARY AMOUNT	M	**M**		
5025	Monetary amount type code qualifier	M an..3	**M**		12 = Amount remitted 38 = Invoice item amount 52 = Discount amount 53 = Discount amount due 109 = Payment discount amount 143 = Transfer amount 203 = Line item amount
5004	Monetary amount	C n..35	**R**		
6345	Currency identification code	C an..3	**O**		
6343	Currency type code qualifier	C an..3	**N**		
4405	Status description code	C an..3	**N**		

Segment Notes:

This segment is used to indicate the line item amount and the amount remitted for the line item identified in the DLI segment for the current document.

Example:
MOA+12:4500'
MOA+38:52000'

5. Segments Layout

Segment number: 64

SG4	- M	9999 -	LIN-DTM-RFF-BUS-FCA-SG5-SG6-SG7-SG8-SG9-SG10-SG11
SG11	- M	99999 -	SEQ-MOA-DTM-RFF-PAI-FCA-SG12-SG13-SG14-SG15-SG16
SG16	- C	1 -	PRC-FTX-SG17-SG23
SG17	- C	9999 -	DOC-MOA-DTM-RFF-NAD-SG18-SG19-SG20
SG20	- C	1000 -	DLI-MOA-PIA-SG22
PIA	- C	5 -	Additional product id

Function:

To specify additional or substitutional item identification codes.

		EDIFACT	GS1	*	Description
4347	Product identifier code qualifier	M an..3	**M**	*	5 = Product identification
C212	ITEM NUMBER IDENTIFICATION	M	**M**		
7140	Item identifier	C an..35	**R**		Number of the article for which the adjustment details are provided.
7143	Item type identification code	C an..3	**R**		AC = HIBC (Health Industry Bar Code) IB = ISBN (International Standard Book Number) IN = Buyer's item number SA = Supplier's article number SRV = GS1 Global Trade Item Number
1131	Code list identification code	C an..17	**O**		
3055	Code list responsible agency code	C an..3	**D**		9 = GS1 91 = Assigned by supplier or supplier's agent 92 = Assigned by buyer or buyer's agent
C212	ITEM NUMBER IDENTIFICATION	C	**O**		
7140	Item identifier	C an..35	**R**		
7143	Item type identification code	C an..3	**R**		
1131	Code list identification code	C an..17	**O**		
3055	Code list responsible agency code	C an..3	**D**		
C212	ITEM NUMBER IDENTIFICATION	C	**O**		
7140	Item identifier	C an..35	**R**		
7143	Item type identification code	C an..3	**R**		
1131	Code list identification code	C an..17	**O**		
3055	Code list responsible agency code	C an..3	**D**		
C212	ITEM NUMBER IDENTIFICATION	C	**O**		
7140	Item identifier	C an..35	**R**		
7143	Item type identification code	C an..3	**R**		
1131	Code list identification code	C an..17	**O**		
3055	Code list responsible agency code	C an..3	**D**		

5. Segments Layout

Segment number: 64

		EDIFACT	GS1	*	Description
C212	ITEM NUMBER IDENTIFICATION	C	**O**		
7140	Item identifier	C an..35	**R**		
7143	Item type identification code	C an..3	**R**		
1131	Code list identification code	C an..17	**O**		
3055	Code list responsible agency code	C an..3	**D**		

Segment Notes:

This segment is used to provide the product identification of the line item detailed in the DLI segment for the current document.

Example:
PIA+5+3323456007803:SRV'

5. Segments Layout

Segment number: 65

SG4	- M	9999 -	LIN-DTM-RFF-BUS-FCA-SG5-SG6-SG7-SG8-SG9-SG10-SG11
SG11	- M	99999 -	SEQ-MOA-DTM-RFF-PAI-FCA-SG12-SG13-SG14-SG15-SG16
SG16	- C	1 -	PRC-FTX-SG17-SG23
SG17	- C	9999 -	DOC-MOA-DTM-RFF-NAD-SG18-SG19-SG20
SG20	- C	1000 -	DLI-MOA-PIA-SG22
SG22	- C	10 -	AJT-MOA-RFF
AJT	- M	1 -	Adjustment details

Function:

To identify the reason for an adjustment.

		EDIFACT	GS1	*	Description
4465	Adjustment reason description code	M an..3	**M**		1 = Agreed settlement 2 = Below specification goods 3 = Damaged goods 4 = Short delivery 5 = Price query 6 = Proof of delivery required 9 = Invoice error 14 = Wrong delivery 17 = Transport damage 20 = Discount for late delivery 32 = Goods not delivered If adjustments are made due to national tax practices then code values to identify these national practices may be allocated for use with this data element by individual Numbering Organisations.
1082	Line item identifier	C an..6	**N**		

Segment Notes:

This segment is used to indicate the reason for an adjustment to the current line identified in the DLI segment.

Example:
AJT+3'

5. Segments Layout

Segment number: 66

SG4	- M	9999	- LIN-DTM-RFF-BUS-FCA-SG5-SG6-SG7-SG8-SG9-SG10-SG11
SG11	- M	99999	- SEQ-MOA-DTM-RFF-PAI-FCA-SG12-SG13-SG14-SG15-SG16
SG16	- C	1	- PRC-FTX-SG17-SG23
SG17	- C	9999	- DOC-MOA-DTM-RFF-NAD-SG18-SG19-SG20
SG20	- C	1000	- DLI-MOA-PIA-SG22
SG22	- C	10	- AJT-MOA-RFF
MOA	- M	1	- Monetary amount

Function:

To specify a monetary amount.

		EDIFACT	GS1	*	Description
C516	MONETARY AMOUNT	M	**M**		
5025	Monetary amount type code qualifier	M an..3	**M**	*	5 = Adjusted amount 165 = Adjustment amount
5004	Monetary amount	C n..35	**R**		
6345	Currency identification code	C an..3	**N**		
6343	Currency type code qualifier	C an..3	**N**		
4405	Status description code	C an..3	**N**		

Segment Notes:

This segment is used to indicate the value of the adjusted amount for the current line item.
Adjustment amounts may be provided for information purposes only, e.g. not for calculation. The adjustment amount will not necessarily equal the difference between the amount due and the amount remitted.
The adjustment amount will always be expressed in terms of the remittance/payment currency.

Example:
MOA+5:4920'

5. Segments Layout

Segment number: 67

SG4	- M	9999	-	LIN-DTM-RFF-BUS-FCA-SG5-SG6-SG7-SG8-SG9-SG10-SG11
SG11	- M	99999	-	SEQ-MOA-DTM-RFF-PAI-FCA-SG12-SG13-SG14-SG15-SG16
SG16	- C	1	-	PRC-FTX-SG17-SG23
SG17	- C	9999	-	DOC-MOA-DTM-RFF-NAD-SG18-SG19-SG20
SG20	- C	1000	-	DLI-MOA-PIA-SG22
SG22	- C	10	-	AJT-MOA-RFF
RFF	- C	1	-	Reference

Function:

To specify a reference.

		EDIFACT	GS1	*	Description
C506	REFERENCE	M	**M**		
1153	Reference code qualifier	M an..3	**M**		ON = Order number (buyer) PL = Price list number PP = Purchase order change number POR = Purchase order response number VN = Order number (supplier)
1154	Reference identifier	C an..70	**R**		
1156	Document line identifier	C an..6	**O**		
4000	Reference version identifier	C an..35	**N**		
1060	Revision identifier	C an..6	**N**		

Segment Notes:

This segment is used to specify any references associated with the adjustment amounts for the current line item.

Example:
RFF+PP:6522'

5. Segments Layout

Segment number: 68

SG4	- M	9999 -	LIN-DTM-RFF-BUS-FCA-SG5-SG6-SG7-SG8-SG9-SG10-SG11
SG11	- M	99999 -	SEQ-MOA-DTM-RFF-PAI-FCA-SG12-SG13-SG14-SG15-SG16
SG16	- C	1 -	PRC-FTX-SG17-SG23
SG23	- C	1 -	GIS-MOA
GIS	- M	1 -	General indicator

Function:

To transmit a processing indicator.

Notes:
1. This segment will be removed effective with directory D.02B.

		EDIFACT	GS1	*	Description
C529	PROCESSING INDICATOR	M	**M**		
7365	Processing indicator description code	M an..3	**M**	*	37 = Complete information
1131	Code list identification code	C an..17	**N**		
3055	Code list responsible agency code	C an..3	**N**		
7187	Process type description code	C an..17	**N**		

Segment Notes:

This segment is used to indicate the end of the detail of payment.
It is recommended that this segment always be included in order to explicitly indicate the end of the payment details.

Example:
GIS+37'

5. Segments Layout

Segment number: 69

SG4	- M	9999	-	LIN-DTM-RFF-BUS-FCA-SG5-SG6-SG7-SG8-SG9-SG10-SG11
SG11	- M	99999	-	SEQ-MOA-DTM-RFF-PAI-FCA-SG12-SG13-SG14-SG15-SG16
SG16	- C	1	-	PRC-FTX-SG17-SG23
SG23	- C	1	-	GIS-MOA
MOA	- C	5	-	Monetary amount

Function:

To specify a monetary amount.

		EDIFACT	GS1	*	Description
C516	MONETARY AMOUNT	M	**M**		
5025	Monetary amount type code qualifier	M an..3	**M**		128 = Total amount
5004	Monetary amount	C n..35	**R**		
6345	Currency identification code	C an..3	**N**		
6343	Currency type code qualifier	C an..3	**N**		
4405	Status description code	C an..3	**N**		

Segment Notes:

This segment is used to indicate the total value level C for control purposes. The figure detailed here is simply an accumulation of the values specified in all MOA segments in level C regardless of the qualifiers used in DE 5025.

Example:
MOA+128:25601'

5. Segments Layout

Segment number: 70

CNT	- C	5 - Control total			
Function: To provide control total.					
		EDIFACT	GS1	*	Description
C270	CONTROL	M	**M**		
6069	Control total type code qualifier	M an..3	**M**		2 = Number of line items in message 40 = Total number of sequence details in message
6066	Control total value	M n..18	**M**		
6411	Measurement unit code	C an..3	**O**		

Segment Notes:

This segment is used to provide application data for message control purposes.

Example:
CNT+2:26'

5. Segments Layout

Segment number: 71

SG24	- C	5 -	AUT-DTM
AUT	- M	1 -	Authentication result

Function:

To specify results of the application of an authentication procedure.

		EDIFACT	GS1	*	Description
9280	Validation result value	M an..35	**M**		
9282	Validation key identifier	C an..35	**O**		This data element is used to identify the key which has been/is used to validate the contents of the message.

Segment Notes:

This segment is used to provide details of any authentication procedures which have been applied to the multiple payment order. The use of this segment is, including any algorithms and calculation procedures, dependent on bilaterally agreed conditions between the message sender and receiver.

Example:
AUT+7761'

5. Segments Layout

Segment number: 72

SG24	- C	5 -	AUT-DTM
DTM	- C	1 -	Date/time/period

Function:

To specify date, and/or time, or period.

		EDIFACT	GS1	*	Description
C507	DATE/TIME/PERIOD	M	**M**		
2005	Date or time or period function code qualifier	M an..3	**M**	*	218 = Authentication/validation date/time
2380	Date or time or period value	C an..35	**R**		
2379	Date or time or period format code	C an..3	**R**		102 = CCYYMMDD

Segment Notes:

This segment is used to provide details related to the date and where necessary, the time, of the multiple payment order validation.

Example:
DTM+218:200206011200:203'
The multiple payment order was validated at 12 noon on the 1st of June 2002.

5. Segments Layout

Segment number: 73

UNT - M 1 - Message trailer					
Function: To end and check the completeness of a message.					
		EDIFACT	GS1	*	Description
0074	Number of segments in the message	M n..6	**M**		The total number of segments in the message.
0062	Message reference number	M an..14	**M**		
Segment Notes: The UNT segment is a mandatory UN/EDIFACT segment. It must always be the last segment in the message. Example: UNT+74+ME0000001'					

Example 1 - Simple Payment Order

The following is an example of a simple payment order message sent by an ordering party identified by GLN 5422331123459 providing details of a simple payment being made to the beneficiary, Mr. J. Holmes.

The message, identified by the number 538851, which was generated on the 1st of August 2002, provides details of payments totalling 50000 Euros (EUR). The banks of the ordering party and beneficiary are identified using the ISO bank identification codes. The message provides details related to three invoices identified by the numbers 43534, 52000, and 52447.

UNH+ME0000001+PAYMUL:D:01B:UN:EAN003'	Message header
BGM+452+538851+9'	Multiple payment order number 538851
DTM+137:20020801:102'	Date of message 1st of August 2002
FII+MR++KREDBEBB:25:5'	Message recipient identified by ISO bank identification code KREDBEBB
NAD+MS+5422331123459::9'	Message sender identified by GLN 5422331123459
LIN+1'	Start of level B
DTM+203:20020828:102'	Requested execution date 28th of August 2002
RFF+AEK:AX-12232'	Payment order reference number identifying B level is AX-12232
MOA+9:50000:EUR'	Amount due/payable equals 50000 EUR
FII+OR+994-9876511:ABC EXPRESS+KREDBEBB:25:5'	Ordered bank and account number identification
NAD+OY+5422331123459::9'	Ordering customer identified by GLN 5422331123459
SEQ++1'	Start of level C, number 1
MOA+9:15000:EUR'	Amount due/payable equals 15000 EUR
RFF+PQ:76632-1223-21'	Reference provided to payment order number 76632-1223-21
RFF+CR:6812-X’	Customer reference number identifying C level is 6812-X
RFF+RA:43534’	reference to remittance advice number 43534
FII+BF+994-3277711:J HOLMES+KREDBEBB:25:5'	Beneficiary’s bank and account number identification
NAD+BE+++MR J HOLMES'	Structured name identification of the beneficiary
SEQ++2'	Start of level C, number 2
MOA+9:20000:EUR'	Amount due/payable equals 20000 EUR
RFF+PQ:76632-1288-33'	Reference provided to payment order number 76632-1288-33
RFF+CR:6844-X’	Customer reference number identifying C level

	is 6844-X
RFF+RA:52000’	Reference to remittance advice number 52000
FII+BF+994-3277711:J HOLMES+KREDBEBB:25:5'	Beneficiary’s bank and account number identification
NAD+BE+++MR J HOLMES'	Structured name identification of the beneficiary
SEQ++3'	Start of level C, number 3
MOA+9:15000:EUR'	Amount due/payable equals 15000 EUR
RFF+PQ:76632-1221-20'	Reference provided to payment order number 76632-1221-20
RFF+CR:6914-X’	Customer reference number identifying C level is 6914-X
RFF+RA:52447’	Reference to remittance advice number 52447
FII+BF+994-3277711:J HOLMES+KREDBEBB:25:5'	Beneficiary’s bank and account number identification
NAD+BE+++MR J HOLMES'	Structured name identification of the beneficiary
UNT+33+ME0000001'	Total number of segments in the message equals 33

Example 2 - Extended Payment Order

The following is an example of a multiple payment order message sent by the ordering party ACE Express Couriers providing details of extended payments being made to the beneficiary identified by GLN 5312345123456.

The message, identified by the number 4021, which was generated on the 21st of June 2002, provides details of payments totalling 8500 Euros (EUR) The banks of the ordering party and beneficiary are identified using the ISO bank identification codes.

Invoice Number	Invoice Value	Invoice Date	Amount Remitted	Adjustment Value	References
434	120	2002/05/10	120		Order No: 664
520	160	2002/05/13	160		Order No: 357
447	6420	2002/05/13	6000	420	Order No: 734 Delivery Note No: 187-A1
466	1800	2002/05/13	1800	1800	

UNH+ME0000001+PAYMUL:D:01B:UN:EAN003'	Message header
BGM+452+4021+9'	Multiple payment advice number 4021
DTM+137:20020621:102'	Date of message 21st of June 2002
FII+MR++DRESDEFF:25:5'	Message recipient identified by ISO bank identification code DRESDEFF
NAD+MS+++ACE EXPRESS COURIERS'	Message sender identified as Ace Express

	Couriers
LIN+1'	Start of B level
DTM+203:20020728:102'	Requested execution date 28th of July 2002
RFF+AEK:7632'	Payment order reference number identifying B level is 7632
MOA+9:8500:EUR'	Amount due/payable equals 8500 EUR
FII+OR+123-9876511:ABC EXPRESS+DRESDEFF:25:5'	Ordered bank and account number identification
NAD+OY+++ACE EXPRESS COURIERS'	Identification of the ordering customer
SEQ++1'	Start of C level
MOA+9:8500:EUR'	Amount due/payable equals 8500 EUR
RFF+PQ:632-23-21'	Payment reference number 632-23-21
RFF+CR:65532’	Customers reference number identifying C level is 65532
FII+BF+994-32366211+KREDBEBB:25:5'	Beneficiary’s bank and account number identification
NAD+BE+5312345123456::9'	Beneficiary identified by GLN 5312345123456
PRC+8'	Structured information follows
DOC+380+434'	Identification of invoice number 434
MOA+38:120'	Invoice item amount 120
MOA+11:120'	Amount paid 120
DTM+137:20020510:102'	Remittance advice date 10th of June 2002
RFF+ON:664'	Identification of order number 664
DOC+380+520'	Identification of invoice number 520
MOA+38:160'	Invoice item amount 160
MOA+11:160'	Amount paid 160
DTM+137:20020613:102'	Remittance advice date 13th of June 2002
RFF+ON:357'	Identification of order number 357
DOC+380+447'	Identification of invoice number 447
MOA+38:6420'	Invoice item amount 6420
MOA+12:6000'	Amount paid 6000
DTM+137:20020613:102'	Remittance advice date 13th of June 2002
RFF+ON:734'	Identification of order number 734
AJT+3'	Adjustments due to damaged goods
MOA+5:420'	Adjusted amount equals 420

RFF+DQ:187-A1'	Reference to Delivery Note number 187-A1
DOC+380+466'	Identification of invoice number 447
MOA+38:1800'	Invoice item amount 1800
MOA+12:1800'	Amount paid 1800
DTM+137:20020613:102'	Remittance advice date 13th of June 2002
GIS+37'	End of remittance data
MOA+139:8500:EUR'	Total payment amount 8500 EUR
UNT+43+ME0000001'	Total number of segments in the message equals 43

Example 3 - Multiple Payment Order

The following is an example of a multiple payment order message sent by the ordering party ABBSA Hyper Markets providing details of multiple payments being made to its suppliers.

The message, identified by the number 6871, which was generated on the 21st of June 2002, provides details of payments totalling 200000 Euros (EUR) The banks of the ordering party and beneficiary are identified using the ISO bank identification codes No remittance data is included in the message but references to EANCOM® remittance advice messages are provided.

Beneficiary	Beneficiary's Bank	Remittance Advice No
5087654111110	KEDBEBB	4018
		4160
5480011222229	UBSCHZHA	3988
		4022
		4089
5312888111118	GENBBEBB	3051
		4029
4021212111113	DRESDEFF	4180
		4199

UNH+ME0000001+PAYMUL:D:01B:UN:EAN003'	Message header
BGM+452+6871+9'	Multiple payment order number 6871
DTM+137:20020621:102'	Message date 21st of June 2002
FII+MR++DRESDEFF:25:5'	Message recipient identified by ISO bank identification code DRESDEFF
NAD+MS+++ABSAA HYPER MARKETS'	Message sender identified as ABSAA Hyper Markets
LIN+1'	Start of B level
DTM+203:20020728:102'	Requested execution date 28th of July 2002
RFF+AEK:UCB6931'	Payment order reference number identifying level B is UCB6931
MOA+9:200000:EUR'	Amount due/payable equals 200000 EUR

FII+OR+123-0032219:ABSAA+DRESDEFF:25:5'	Ordered bank and account number identification
NAD+OY+++ABSAA HYPER MARKETS'	Identification of the ordering customer
SEQ++1'	Start of C level number 1
MOA+9:68000'	Amount due/payable equals 68000 EUR
RFF+PQ:517662'	Payment reference number 517662
RFF+CR:8462'	Customer reference number identifying C level is 8462
RFF+RA:4018'	Remittance advice number 4018
FII+BF+994-32366211+KREDBEBB:25:5'	Beneficiary's bank and account number identification
NAD+BE+5087654111110::9'	Beneficiary identified by GLN 5087654111110
SEQ++2'	Start of C level number 2
MOA+9:5400'	Amount due/payable equals 5400 EUR
RFF+PQ:522662'	Payment reference number 522662
RFF+CR:8802'	Customer reference number identifying C level is 8802
RFF+RA:4160'	Remittance advice number 4160
FII+BF+994-32366211+KREDBEBB:25:5'	Beneficiary's bank and account number identification
NAD+BE+5087654111110::9'	Beneficiary identified by GLN 5087654111110
SEQ++3'	Start of C level number 3
MOA+9:12680'	Amount due/payable equals 12680 EUR
RFF+PQ:651662'	Payment reference number 651662
RFF+CR:8868'	Customer reference number identifying C level is 8868
RFF+RA:3988'	Remittance advice number 3988
FII+BF+650-52217711+UBSCHZHA:25:5'	Beneficiary's bank and account number identification
NAD+BE+5480011222229::9'	Beneficiary identified by GLN 5480011222229
SEQ++4'	Start of C level number 3
MOA+9:11000'	Amount due/payable equals 11000 EUR
RFF+PQ:63362'	Payment reference number 63362
RFF+CR:8928'	Customer reference number identifying C level is 8928
RFF+RA:4022'	Remittance advice number 4022
FII+BF+650-52217711+UBSCHZHA:25:5'	Beneficiary's bank and account number

	identification
NAD+BE+5480011222229::9'	Beneficiary identified by GLN 5480011222229
SEQ++5'	Start of C level number 5
MOA+9:4000'	Amount due/payable equals 4000 EUR
RFF+PQ:82882'	Payment reference number 82882
RFF+CR:9068'	Customer reference number identifying C level is 9068
RFF+RA:4089'	Remittance advice number 4089
FII+BF+650-52217711+UBSCHZHA:25:5'	Beneficiary's bank and account number identification
NAD+BE+5480011222229::9'	Beneficiary identified by GLN 5480011222229
SEQ++6'	Start of C level number 6
MOA+9:42000'	Amount due/payable equals 42000 EUR
RFF+PQ:441740'	Payment reference number 441740
RFF+CR:6208'	Customer reference number identifying C level is 6208
RFF+RA:3051'	Remittance advice number 3051
FII+BF+520-87552250+GENBBEBB:25:5'	Beneficiary's bank and account number identification
NAD+BE+5312888111118::9'	Beneficiary identified by GLN 5312888111118
SEQ++7'	Start of C level number 7
MOA+9:25000'	Amount due/payable equals 25000 EUR
RFF+PQ:462150'	Payment reference number 462150
RFF+CR:7140'	Customer reference number identifying C level is 7140
RFF+RA:4029'	Remittance advice number 4029
FII+BF+520-87552250+GENBBEBB:25:5'	Beneficiary's bank and account number identification
NAD+BE+5312888111118::9'	Beneficiary identified by GLN 5312888111118
SEQ++8'	Start of C level number 8
MOA+9:14000'	Amount due/payable equals 14000 EUR
RFF+PQ:504401'	Payment reference number 504401
RFF+CR:8001'	Customer reference number identifying C level is 8001
RFF+RA:4180'	Remittance advice number 4180
FII+BF+988-53324781+DRESDEFF:25:5'	Beneficiary's bank and account number identification

6. Examples

NAD+BE+4021212111113::9'	Beneficiary identified by GLN 4021212111113
SEQ++9'	Start of C level number 9
MOA+9:17920'	Amount due/payable equals 17920 EUR
RFF+PQ:841401'	Payment reference number 841401
RFF+CR:8552'	Customer reference number identifying C level is 8552
RFF+RA:4199'	Remittance advice number 4199
FII+BF+988-53324781+DRESDEFF:25:5'	Beneficiary's bank and account number identification
NAD+BE+4021212111113::9'	Beneficiary identified by GLN 4021212111113
UNT+75+ME0000001'	Total number of segments in the message equals 75

Note:
The EDI interchange will include the UNB..UNZ segments and, if applicable, the UNG..UNE segments. (See part 1 section 5.7).